Low-voltage current transformers for industrial applications

Plug-in current transformer

ASK 176.3	Busbar 1: 17 x 6 mm Round conductor: 15,2 mm Transformer width: 45 mm	Current range: 75 ... 250 A	Page: 40
ASK 205.3	Busbar 1: 20 x 5 mm Round conductor: 17,5 mm Transformer width: 49,5 mm	Current range: 60 ... 400 A	Page: 41
ASK 21.3	Busbar 1: 20 x 10 mm Round conductor: 19,2 mm Transformer width: 61 mm	Current range: 50 ... 500 A	Page: 42
ASK 421.4	Busbar 1: 20 x 10 mm Round conductor: 20 mm Transformer width: 71 mm	Current range: 40 ... 500 A	Page: 43
ASK 231.5	Busbar 1: 30 x 10 mm Round conductor: 28 mm Transformer width: 50 mm	Current range: 60 ... 500 A	Page: 44
ASK 31.3 **ASK 31.3 2U**	Busbar 1: 30 x 10 mm Busbar 2: 2x 20 x 10 mm Round conductor: 26 mm Transformer width: 61 mm	Current range: 50 ... 750 A	Page: 45
ASK 31.4 **ASK 31.4 2U** **ASK 31.4 3U**	Busbar 1: 30 x 10 mm Busbar 2: 2x 20 x 10 mm Round conductor: 28 mm Transformer width: 61 mm	Current range: 50 ... 750 A	Page: 47
ASK 31.5 **ASK 31.5 2U**	Busbar 1: 30 x 10 mm Busbar 2: 2x 20 x 10 mm Round conductor: 28 mm Transformer width: 61 mm	Current range: 40 ... 750 A	Page: 49

ASK 31.6	Busbar 1: 30 x 10 mm Busbar 2: 20 x 13 mm Round conductor: 23 mm Transformer width: 95 mm	Current range: 40 ... 750 A	Page: 51
ASK 318.3	Busbar 1: 31 x 18 mm Round conductor: 26 mm Transformer width: 61 mm	Current range: 60 ... 600 A	Page: 52
ASK 41.4 **ASK 41.4 2U** **ASK 41.4 3U**	Busbar 1: 40 x 10 mm Busbar 2: 2x 30 x 5 mm Round conductor: 32 mm Transformer width: 71 mm	Current range: 50 ... 1000 A	Page: 53
ASK 541.4	Busbar 1: 40 x 10 mm Busbar 2: 2x 30 x 5 mm Round conductor: 32 mm Transformer width: 86 mm	Current range: 30 ... 750 A	Page: 55
ASK 41.5	Busbar 1: 40 x 10 mm Busbar 2: 2x 30 x 5 mm Round conductor: 32 mm Transformer width: 71 mm	Current range: 60 ... 1000 A	Page: 57
ASK 41.3	Busbar 1: 40 x 12 mm Busbar 2: 32 x 18 mm Round conductor: 26 mm Transformer width: 61 mm	Current range: 100 ... 750 A	Page: 58
ASK 412.4 **ASK 412.4 2U** **ASK 412.4 3U**	Busbar 1: 40 x 12 mm Busbar 2: 30 x 15 mm Round conductor: 30,5 mm Transformer width: 71 mm	Current range: 50 ... 800 A	Page: 59
ASK 41.6	Busbar 1: 40 x 12 mm Busbar 2: 30 x 15 mm Round conductor: 32 mm Transformer width: 95 mm	Current range: 50 ... 1000 A	Page: 61
ASK 51.4 **ASK 51.4 2U** **ASK 51.4 3U**	Busbar 1: 50 x 10 mm Busbar 2: 2x 40 x 10 mm Round conductor: 44 mm Transformer width: 86 mm	Current range: 100 ... 1250 A	Page: 62
ASK 51.6	Busbar 1: 50 x 12 mm Busbar 2: 2x 40 x 10 mm Round conductor: 40 mm Transformer width: 95 mm	Current range: 100 ... 1250 A	Page: 64

ASK 561.4	Busbar 1: 60 x 10 mm Busbar 2: 2x 50 x 10 mm Round conductor: 44 mm Transformer width: 86 mm	Current range: 200 ... 1250 A	Page: 65
ASK 61.4 **ASK 61.4 2U** **ASK 61.4 3U**	Busbar 1: 60 x 10 mm Busbar 2: 2x 50 x 10 mm Round conductor: 44 mm Transformer width: 96 mm	Current range: 200 ... 1200 A	Page: 66
ASK 615.3	Busbar 1: 60,6 x 15,15 mm Round conductor: 52 mm Transformer width: 90 mm	Current range: 200 ... 1600 A	Page: 69
ASK 61.6	Busbar 1: 60 x 10 mm Busbar 2: 2x 50 x 10 mm Round conductor: 40 mm Transformer width: 95 mm	Current range: 100 ... 1200 A	Page: 71
ASK 63.4	Busbar 1: 60 x 30 mm Busbar 2: 50 x 40 mm Round conductor: 44 mm Transformer width: 96 mm	Current range: 300 ... 1600 A	Page: 73
ASK 63.6	Busbar 1: 60 x 30 mm Round conductor: 30 mm Transformer width: 88 mm	Current range: 200 ... 2000 A	Page: 74
ASK 81.4 **ASK 81.4 2U** **ASK 81.4 3U**	Busbar 1: 80 x 10 mm Busbar 2: 2x 60 x 10 mm Round conductor: 55 mm Transformer width: 120 mm	Current range: 400 ... 2000 A	Page: 75
ASK 83.3	Busbar 1: 3 x 80 x 10 mm Busbar 2: 3 x 60 x 10 mm Round conductor: 70 mm Transformer width: 106 mm	Current range: 400 ... 2500 A	Page: 77
ASK 83.4	Busbar 1: 84 x 34 mm Round conductor: 34 mm Transformer width: 96 mm	Current range: 300 ... 2000 A	Page: 79
ASK 101.4 **ASK 101.4 2U**	Busbar 1: 100 x 10 mm Busbar 2: 2x 80 x 10 mm Round conductor: 70 mm Transformer width: 130 mm	Current range: 500 ... 2000 A	Page: 81

ASK 103.3	Busbar 1: 2x 100 x 10 mm Busbar 2: 3x 80 x 10 mm Round conductor: 85 mm Transformer width: 172 mm	Current range: 750 ... 3000 A	Page: 83
ASK 103.41 **ASK 103.41 2U**	Busbar 1: 103 x 41 mm Round conductor: 40 mm Transformer width: 99 mm	Current range: 400 ... 2000 A	Page: 84
ASK 105.3	Busbar 1: 100 x 56 mm Transformer width: 129 mm	Current range: 400 ... 4000 A	Page: 85
ASK 105.6	Busbar 1: 100 x 55 mm Round conductor: 55 mm Transformer width: 129 mm	Current range: 600 ... 3000 A	Page: 88
ASK 105.6N	Busbar 1: 100 x 55 mm Round conductor: 55 mm Transformer width: 129 mm	Current range: 2500 ... 4000 A	Page: 89
ASK 123.3	Busbar 1: 123 x 30 mm Busbar 2: 3x 100 x 10 mm Round conductor: 100 mm Transformer width: 172 mm	Current range: 750 ... 3000 A	Page: 90
ASK 127.3	Busbar 1: 127 x 71 mm Transformer width: 159 mm	Current range: 400 ... 4000 A	Page: 91
ASK 127.4	Busbar 1: 120 x 70 mm Round conductor: 70 mm Transformer width: 159 mm	Current range: 1000 ... 2500 A	Page: 94
ASK 127.6	Busbar 1: 120 x 70 mm Round conductor: 70 mm Transformer width: 205 mm	Current range: 1000 ... 6000 A	Page: 95
ASK 128.4	Busbar 1: 128 x 38 mm Round conductor: 38 mm Transformer width: 100 mm	Current range: 400 ... 2500 A	Page: 96
ASK 129.10	Busbar 1: 120 x 90 mm Round conductor: 90 mm Transformer width: 250 mm	Current range: 1000 ... 7500 A	Page: 97

ASK 130.3	Busbar 1: 130 x 25 mm Round conductor: 25 mm Transformer width: 180 mm	Current range: 300 ... 1600 A	Page: 98
ASK 130.5	Busbar 1: 130 x 30 mm Round conductor: 30 mm Transformer width: 180 mm	Current range: 300 ... 3200 A	Page: 99
ASK 165.5	Busbar 1: 190 x 60 mm Busbar 2: 3x 160 x 10 mm Transformer width: 266 mm	Current range: 1000 ... 4000 A	Page: 100
ASK 205.5	Busbar 1: 230 x 60 mm Busbar 2: 3x 200 x 10 mm Transformer width: 306 mm	Current range: 1200 ... 5000 A	Page: 104

ASK 176.3

Plug-in current transformer

Busbar 1	17 x 6 mm
Round conductor	15,2 mm
Transformer width	45 mm
Height	65 mm
Depth	46 mm

		Secondary current [A] / Class			
Primary current [A]	Burden [VA]	5 A Cl. 1 Art.-no.	5 A Cl. 0,5 Art.-no.	1 A Cl. 1 Art.-no.	1 A Cl. 0,5 Art.-no.
75	1,5	1020006009		1020206009	
80	1,5	1020006010		1020206010	
100	1		1020005007		1020205007
	2	1020006001		1020206001	
125	1,5		1020005008		1020205008
	2,5	1020006002		1020206002	
150	1,5	1020006007	1020005001	1020206007	1020205001
	2,5	1020006003	1020005006	1020206003	1020205006
160	2,5	1020006004	1020005004	1020206004	1020205004
200	2,5	1020006005	1020005002	1020206005	1020205002
250	2,5	1020006008	1020005003	1020206008	1020205003
	3,75	1020006006		1020206006	

		Art.-no.
	Snap-on mounting, type E	**55013**
	Sealed shutter	**–**

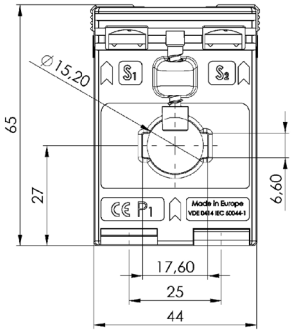

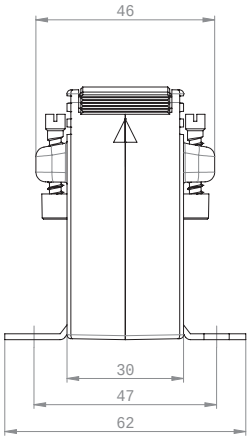

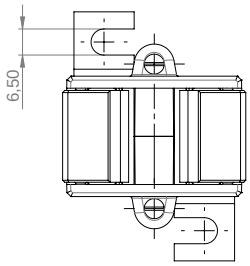

ASK 205.3

Plug-in current transformer

Busbar 1	20 x 5 mm
Round conductor	17,5 mm
Transformer width	49,5 mm
Height	65 mm
Depth	30 mm

		Secondary current [A] / Class	
Primary current [A]	Burden [VA]	5 A Cl. 1 Art.-no.	1 A Cl. 1 Art.-no.
60	1	2019	2219
75	1	2020	2220
80	1,25	2021	2221
100	1,25	2022	2222
	1,5	2023	2223
150	1,5	2024	2224
	2,5	2025	2225
200	1,5	2026	2226
	2,5	2027	2227
250	2,5	2028	2228
	5	2029	2229
300	2,5	2030	2230
	5	2031	2231
400	2,5	2032	2232
	5	2033	2233

		Art.-no.
	Snap-on mounting, type F	**55014**
	Sealed shutter	**–**

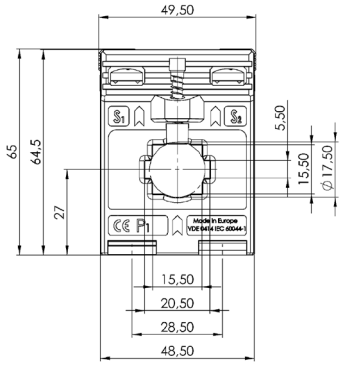

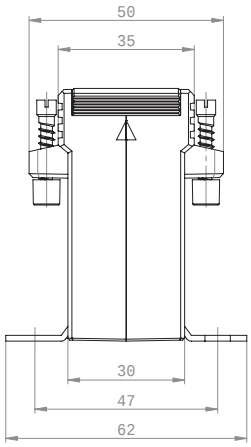

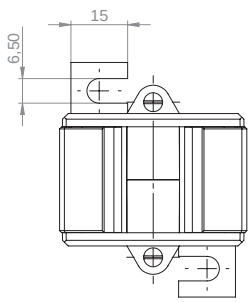

ASK 21.3

Plug-in current transformer

Busbar 1	20 x 10 mm
Round conductor	19,2 mm
Transformer width	61 mm
Height	75,5 mm
Depth	48 mm

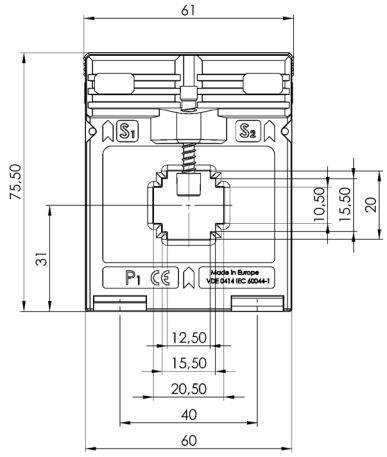

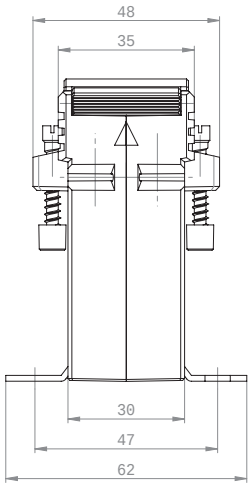

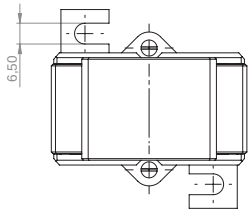

	Secondary current [A] / Class				
Primary current [A]	Burden [VA]	5 A Cl. 1 Art.-no.	5 A Cl. 0,5 Art.-no.	5 A Cl. 0,2s Art.-no.	1 A Cl. 1 Art.-no.	1 A Cl. 0,5 Art.-no.
50	1	6035			6235	
60	1	6037			6237	
	1,5	6038			6238	
75	1,5	6039			6239	
	2,5	6040			6240	
80	1,5	6041			6241	
	2,5	6042			6242	
100	1,5	6043	6011		6243	6211
	2,5	6044	6111		6244	6311
	3,75	6077			6277	
150	1,5	6046	6012	V10-1604C	6246	6212
	2,5	6047	6013	V10-1604D	6247	6213
	5	6048			6248	
200	2,5	6049	6015	V10-1704D	6249	6215
	5	6050	6016	V10-1704F	6250	6216
	7,5	6083			6283	
	10	6051			6251	
250	2,5	6052	6018	V10-1804D	6252	6218
	5	6053	6019	V10-1804F	6253	6219
	10	6054	6020		6254	6220
300	2,5	6056	6022	V10-1904D	6256	6222
	5	6057	6023	V10-1904F	6257	6223
	10	6058	6024		6258	6224
400	2,5	6060	6025	V10-2004D	6260	6225
	5	6061	6026	V10-2004F	6261	6226
	10	6062	6027		6262	6227
	15	6063			6263	
500	2,5	6064	6028	V10-2104D	6264	6228
	5	6065	6029	V10-2104F	6265	6229
	10	6066	6030		6266	6230

		Art.-no.
	Snap-on mounting, type A	**53011**
	Sealed shutter, type A	**59040**

ASK 421.4

Plug-in current transformer

Busbar 1	20 x 10 mm
Round conductor	20 mm
Transformer width	71 mm
Height	85,5 mm
Depth	58 mm

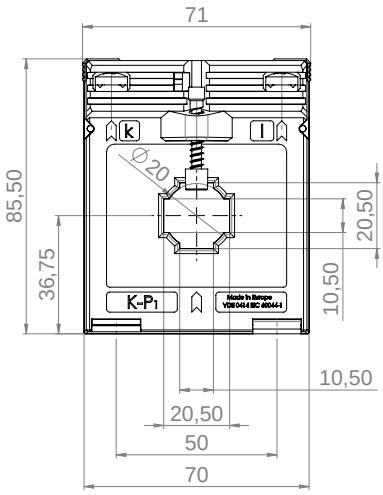

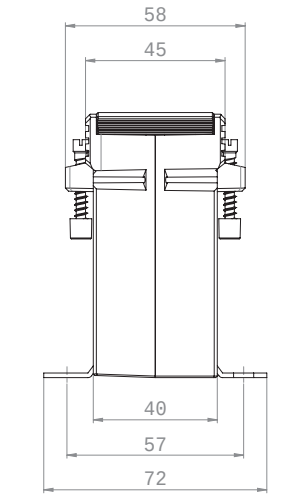

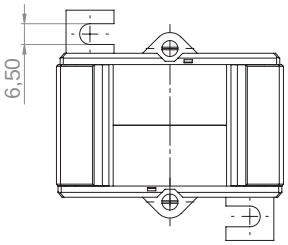

	Secondary current [A] / Class			
Primary current [A]	Burden [VA]	5 A Cl. 1 Art.-no.	5 A Cl. 0,5 Art.-no.	1 A Cl. 1 Art.-no.	1 A Cl. 0,5 Art.-no.
40	1,5	12034		12234	
50	1,5	12035	12011	12235	12211
	2,5	12036		12236	
60	1,5	12037	12012	12237	12212
	2,5	12038		12238	
75	1,5		12009		12209
	2,5	12040	12013	12240	12213
	3,75	12069		12269	
80	1,5		12010		12210
	2,5	12042	12014	12242	12214
	3,75	12068		12268	
	5			12243	
100	2,5	12044	12015	12244	12215
	5	12045		12245	
125	2,5	12047	12017	12247	12217
	5	12048	12018	12248	12218
150	2,5	12112	12019	12293	12219
	5	12050	12020	12250	12220
	10	12051		12251	
200	2,5	12276	12021	12294	12221
	5	12053	12022	12253	12222
	10	12054		12254	
	15	12055		12255	
250	5	12056	12023	12256	12223
	10	12057	12024	12257	12224
	15	12058		12258	
300	5	12059	12025	12259	12225
	10	12060	12026	12260	12226
	15	12061		12261	
400	5	12113	12027	12295	12227
	10	12062	12028	12262	12228
	15	12063	12029	12263	12229
500	5	12280	12030	12296	12230
	10	12065	12031	12265	12231
	15	12066	12032	12266	12232

		Art.-no.
	Snap-on mounting, type D	**55012**
	Sealed shutter, type B	**59041**

ASK 231.5

Plug-in current transformer

Busbar 1	30 x 10 mm
Round conductor	28 mm
Transformer width	50 mm
Height	70 mm
Depth	68 mm

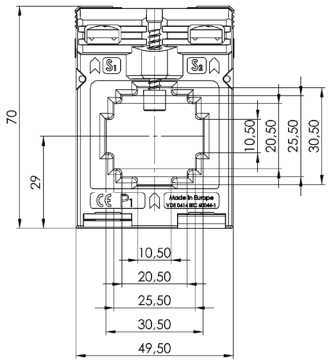

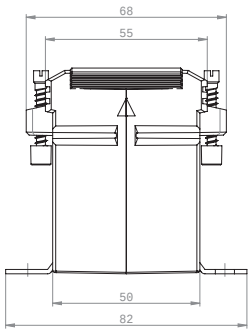

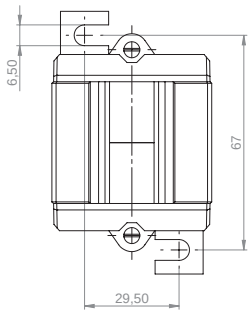

		Secondary current [A] / Class			
Primary current [A]	Burden [VA]	5 A Cl. 1 Art.-no.	5 A Cl. 0,5 Art.-no.	1 A Cl. 1 Art.-no.	1 A Cl. 0,5 Art.-no.
60	1	92052		92252	
75	1,25	92054		92254	
80	1,25	92056		92256	
100	1,5	92059		92259	
125	1,5	92062		92262	92220
	2,5	92063		92263	
150	1,5	92065		92265	92223
	2,5	92066		92266	
200	2,5	92068	92026	92268	92226
250	2,5	92071	92028	92271	92228
	5			92272	
300	2,5	92074	92030	92274	92230
	5	92075		92275	
400	2,5	92077	92032	92277	92232
	5	92078	92033	92278	92233
500	2,5	92081	92035	92281	92235
	5	92082	92036	92282	92236

		Art.-no.
	Snap-on mounting	–
	Sealed shutter	–

ASK 31.3

Plug-in current transformer

Busbar 1	30 x 10 mm
Busbar 2	2 x 20 x 10 mm
Round conductor	26 mm
Transformer width	61 mm
Height	75,5 mm
Depth	48 mm

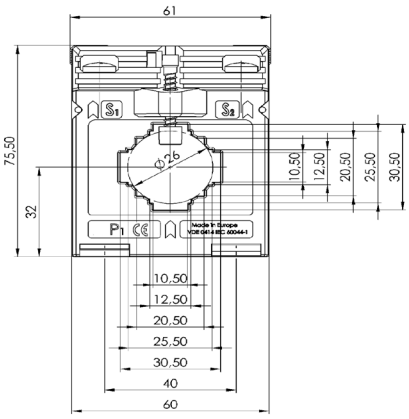

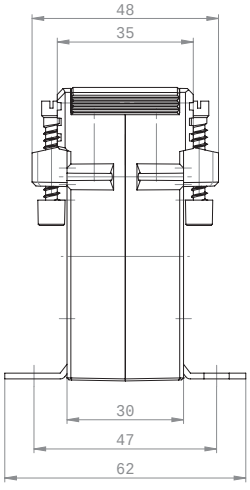

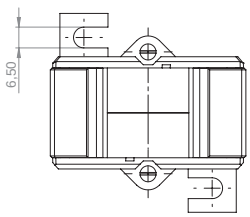

	Secondary current [A] / Class				
Primary current [A]	Burden [VA]	5 A Cl. 1 Art.-no.	5 A Cl. 0,5 Art.-no.	5 A Cl. 0,2s Art.-no.	1 A Cl. 1 Art.-no.	1 A Cl. 0,5 Art.-no.
50	1	7038			7238	
60	1	7039			7239	
75	1	7040			7240	
	1,5	7041			7241	
80	1,5	7042			7242	
	2,5	7043			7243	
100	1,5	7044	7011		7244	7211
	2,5	7045	7012		7245	7212
150	1,5	7046	7013	V11-1604C	7246	7213
	2,5	7047	7014		7247	7214
200	1,5	7048	7015	V11-1704C	7248	7215
	2,5	7049	7016	V11-1704D	7249	7216
	5	7050	7017		7250	
250	1,5	7051	7018	V11-1804C	7251	7218
	2,5	7052	7019	V11-1804D	7252	7219
	5	7053	7020	V11-1804F	7253	7220
300	1,5	7055	7021	V11-1904C	7255	7221
	2,5	7056	7022	V11-1904D	7256	7222
	5	7057	7023	V11-1904F	7257	7223
400	1,5	7059		V11-2004C	7259	
	2,5	7060	7025	V11-2004D	7260	7225
	5	7061	7026	V11-2004F	7261	7226
	10	7062			7262	
500	2,5	7063	7028	V11-2104D	7263	7228
	5	7064	7029	V11-2104F	7264	7229
	10	7065	7030		7265	7230
600	2,5	7066	7031	V11-2204D	7266	7231
	5	7067	7032	V11-2204F	7267	7232
	10	7068			7268	7233
750	2,5	7070	7035	V11-2304D	7270	7235
	5	7071	7036	V11-2304F	7271	7236
	10	7072	7037		7272	7237

		Art.-no.
	Snap-on mounting, type A	**53011**
	Sealed shutter, type A	**59040**

ASK 31.3 2U

Plug-in current transformer, secondary reconnectable

Busbar 1	30 x 10 mm
Busbar 2	2 x 20 x 10 mm
Round conductor	26 mm
Transformer width	61 mm
Height	75,5 mm
Depth	48 mm

	Secondary current [A] / Class	
Primary current [A]	Burden [VA]	5 A Cl. 1 Art.-no.	1 A Cl. 1 Art.-no.
200-100	5-2,5	7111	7311
300-150	5-2,5	7112	7312
400-200	5-2,5	7113	7313
	10-5	7114	7314
500-250	5-2,5	7115	7315
	10-5	7116	7316
600-300	10-5	7117	7317

		Art.-no.
	Snap-on mounting, type A	**53011**
	Sealed shutter, type A	**59040**

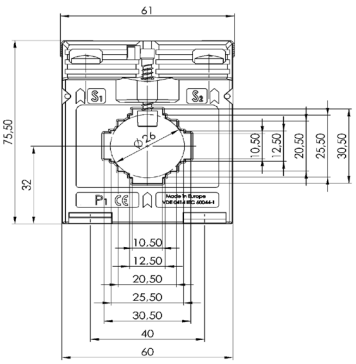

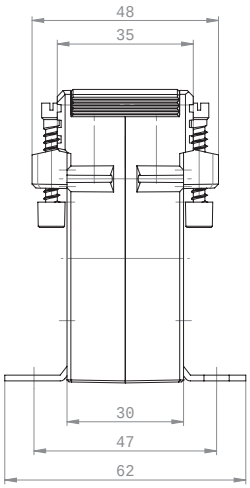

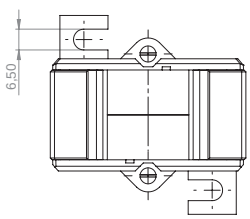

ASK 31.4

Plug-in current transformer

Busbar 1	30 x 10 mm
Busbar 2	2 x 20 x 10 mm
Round conductor	28 mm
Transformer width	61 mm
Height	75,5 mm
Depth	58 mm

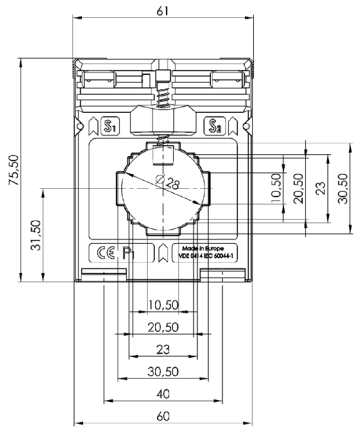

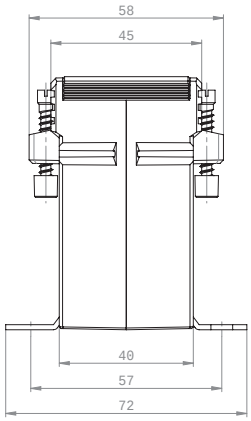

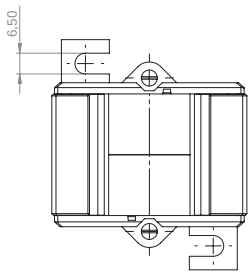

		Secondary current [A] / Class				
Primary current [A]	Burden [VA]	5 A Cl. 1 Art.-no.	5 A Cl. 0,5 Art.-no.	5 A Cl. 0,2s Art.-no.	1 A Cl. 1 Art.-no.	1 A Cl. 0,5 Art.-no.
50	1,25	8157			8357	
	1,5	8038				
60	1,25	8158			8358	
	1,5	8039			8239	
75	1,5	8041			8241	
	2,5	8042			8242	
80	1,5	8043			8243	
	2,5	8044			8244	
100	1,5	8045	8011		8245	8211
	2,5	8046	8010		8246	8210
	3,75	8152			8276	
150	1,5	8048	8012	V14-1604C	8248	8212
	2,5	8049	8013	V14-1604D	8249	8213
	5	8050	8410		8250	
200	2,5	8052	8014	V14-1704D	8252	8214
	5	8053	8015	V14-1704F	8253	8215
	7,5	8161			8281	
	10				8254	
250	2,5	8055	8016	V14-1804D	8255	8216
	5	8056	8017	V14-1804F	8256	8217
	10	8057			8257	
300	2,5	8059	8018	V14-1904D	8259	8218
	5	8060	8019	V14-1904F	8260	8219
	10	8061	8020		8261	8220
	15				8262	
400	2,5	8063	8021	V14-2004D	8263	8221
	5	8064	8022	V14-2004F	8264	8222
	10	8065	8023		8265	8223
	15				8266	
500	2,5	8067	8025	V14-2104D	8267	8225
	5	8068	8026	V14-2104F	8268	8226
	10	8069	8027		8269	8227
600	2,5	8071	8029	V14-2204D	8271	8229
	5	8072	8030	V14-2204F	8272	8230
	10	8073	8031	V14-2204H	8273	8231
	15	8074	8032		8274	8232
750	2,5	8153	8033	V14-2304D	8353	8233
	5	8154	8034	V14-2304F	8354	8234
	10	8155	8035	V14-2304H	8355	8235
	15	8156	8036		8356	8236

		Art.-no.
	Snap-on mounting, type B	**54011**
	Sealed shutter, type B	**59041**

Busbar 1	30 x 10 mm
Busbar 2	2 x 20 x 10 mm
Round conductor	28 mm
Transformer width	61 mm
Height	75,5 mm
Depth	58 mm

ASK 31.4 2U

Plug-in current transformer, secondary reconnectable

		Secondary current [A] / Class	
Primary current [A]	Burden [VA]	5 A Cl. 1 Art.-no.	1 A Cl. 1 Art.-no.
200-100	5-2,5	8117	8317
300-150	5-2,5	8118	8318
	10-5	8119	8319
400-200	5-2,5	8120	8320
	10-5	8121	8321
500-250	5-2,5	8122	8322
	10-5	8123	8323
600-300	5-2,5	8124	8324
	10-5	8125	8325
	15-7,5	8126	8326

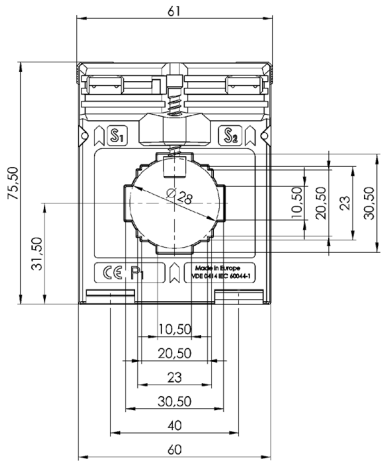

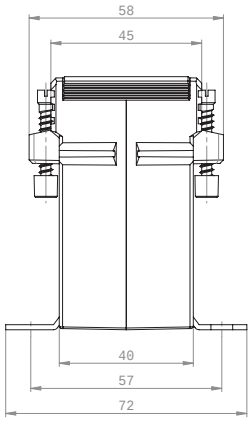

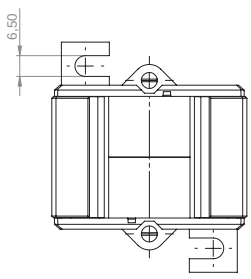

ASK 31.4 3U

Plug-in current transformer, secondary reconnectable

		Secondary current [A] / Class	
Primary current [A]	Burden [VA]	5 A Cl. 1 Art.-no.	1 A Cl. 1 Art.-no.
300-200-100	10-5-2,5	8137	8337
400-200-100	10-5-2,5	8138	8338
600-300-150	10-5-2,5	8139	8339
	15-10-5	8140	8340
600-400-200	10-5-2,5	8141	8341
	15-10-5	8142	8342

		Art.-no.
	Snap-on mounting, type B	**54011**
	Sealed shutter, type B	**59041**

ASK 31.5

Plug-in current transformer

Busbar 1	30 x 10 mm
Round conductor	28 mm
Transformer width	61 mm
Height	75,5 mm
Depth	68 mm

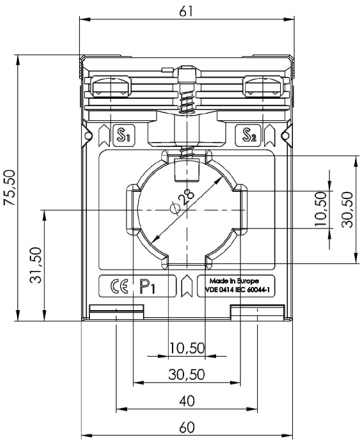

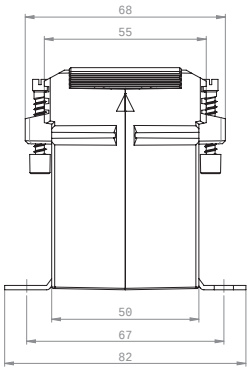

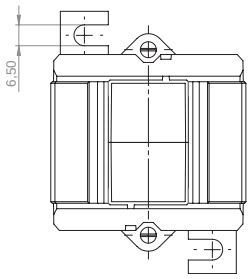

	Secondary current [A] / Class			
Primary current [A]	Burden [VA]	5 A Cl. 1 Art.-no.	5 A Cl. 0,5 Art.-no.	1 A Cl. 1 Art.-no.	1 A Cl. 0,5 Art.-no.
40	1	9043		9243	
50	1,5	9045		9245	
60	1,5	9047		9247	
	2,5	9048		9248	
75	1,5	9049	9011	9249	9211
	2,5	9050	9012	9250	9212
80	1,5	9051	9013	9251	9213
	2,5	9052	9014	9252	9214
100	1,5	9054	9015	9254	9215
	2,5	9055	9016	9255	9216
	5	9056	9017	9256	9217
150	2,5	9057	9018	9257	9218
	5	9058	9019	9258	9219
	7,5	9059		9259	
200	2,5	9060	9020	9260	9220
	5	9061	9021	9261	9221
	10	9062	9022	9262	9222
250	5	9064	9023	9264	9223
	10	9065	9024	9265	9224
	15	9066	9025	9266	9225
300	5	9067	9026	9267	9226
	10	9068	9027	9268	9227
	15	9069	9028	9269	9228
400	5	9070	9029	9270	9229
	10	9071	9030	9271	9230
	15	9072	9031	9272	9231
500	5	9074	9032	9274	9232
	10	9075	9033	9275	9233
	15	9076	9034	9276	9234
600	5	9078	9035	9278	9235
	10	9079	9036	9279	9236
	15	9080	9037	9280	9237
750	5	9082	9038	9282	9238
	10	9083	9039	9283	9239
	15	9084	9040	9284	9240

		Art.-no.
	Snap-on mounting, type C	**55011**
	Sealed shutter, type B	**59041**

ASK 31.5 2U

Plug-in current transformer, secondary reconnectable

Busbar 1	30 x 10 mm
Round conductor	28 mm
Transformer width	61 mm
Height	75,5 mm
Depth	68 mm

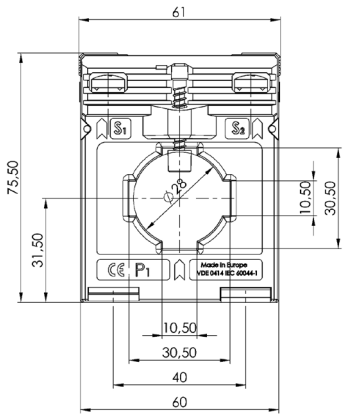

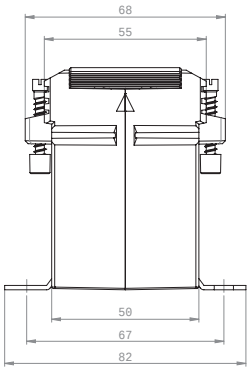

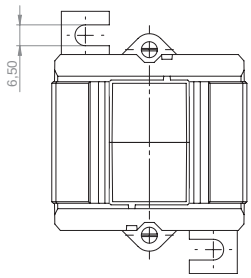

	Secondary current [A] / Class	
Primary current [A]	Burden [VA]	5 A Cl. 1 Art.-no.	1 A Cl. 1 Art.-no.
150-75	5-2,5	9132	9332
200-100	5-2,5	9133	9333
	10-5	9134	9334
300-150	5-2,5	9135	9335
	10-5	9136	9336
	15-7,5	9137	9337
400-200	5-2,5	9138	9338
	10-5	9139	9339
	15-7,5	9140	9340
500-250	5-2,5	9141	9341
	10-5	9142	9342
	15-7,5	9143	9343
600-300	5-2,5	9144	9344
	10-5	9145	9345
	15-7,5	9146	9346

		Art.-no.
	Snap-on mounting, type C	**55011**
	Sealed shutter, type B	**59041**

ASK 31.6

Plug-in current transformer

Busbar 1	30 x 10 mm
Busbar 2	20 x 13 mm
Round conductor	23 mm
Transformer width	95 mm
Height	116 mm
Depth	74 mm

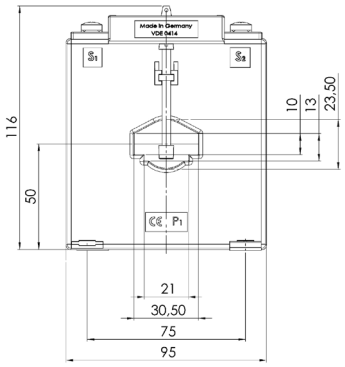

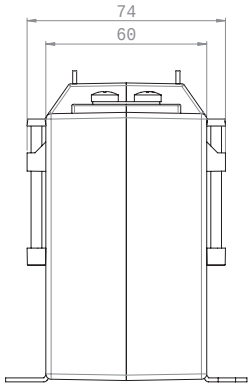

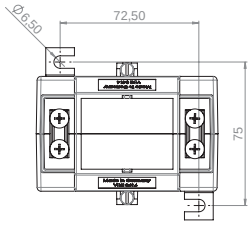

	Secondary current [A] / Class			
Primary current [A]	Burden [VA]	5 A Cl. 1 Art.-no.	5 A Cl. 0,5 Art.-no.	1 A Cl. 1 Art.-no.	1 A Cl. 0,5 Art.-no.
40	1,5	10056		10256	
50	1,5		10011		
	2,5	10058	10012		
60	1,5		10013		10213
	2,5	10059	10014	10259	10214
	3,75	10060		10260	
75	2,5	10061	10015	10261	10215
	5	10062	10016	10262	10216
80	2,5	10063	10017	10263	10217
	5	10064	10018	10264	10218
	10			10265	
100	2,5	10066	10019	10266	10219
	5	10067	10020	10267	10220
	10	10068	10021	10268	10221
150	2,5		10022		10222
	5	10070	10023	10270	10223
	10	10071	10024	10271	10224
	15	10072	10025	10272	10225
200	2,5		10026		10226
	5	10073	10027	10273	10227
	10	10074	10028	10274	10228
	15	10075	10029	10275	10229
	30	10120		10320	
250	5	10076	10030	10276	10230
	10	10077	10031	10277	10231
	15	10078	10032	10278	10232
	30	10124		10324	
300	5	10079	10034	10279	10234
	10	10080	10035	10280	10235
	15	10081	10036	10281	10236
	30	10125		10325	
400	5	10082	10038	10282	10238
	10	10083	10039	10283	10239
	15	10084	10040	10284	10240
	30	10406		10326	
500	5	10085	10042	10285	10242
	10	10086	10043	10286	10243
	15	10087	10044	10287	10244
	30	10121	10045	10321	10245
600	5	10088	10046	10288	10246
	10	10089	10047	10289	10247
	15	10090	10048	10290	10248
	30	10122	10049	10322	10249
750	5	10091	10050	10291	10250
	10	10092	10051	10292	10251
	15	10093	10052	10293	10252
	30	10123	10053	10323	10253

		Art.-no.
	Snap-on mounting	**–**
	Sealed shutter, type E	**59044**

ASK 318.3

Plug-in current transformer

Busbar 1	31 x 18 mm
Round conductor	26 mm
Transformer width	61 mm
Height	75,5 mm
Depth	48 mm

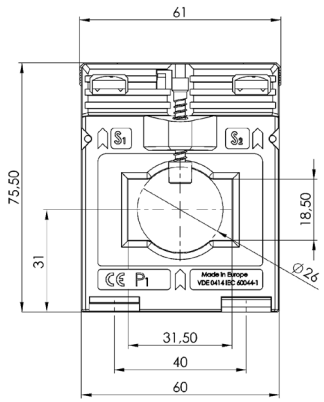

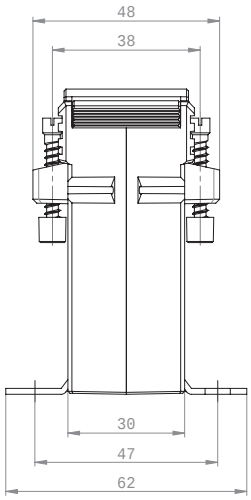

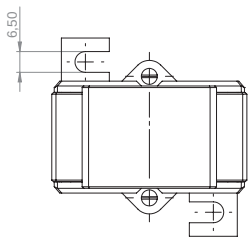

	Secondary current [A] / Class			
Primary current [A]	Burden [VA]	5 A Cl. 1 Art.-no.	5 A Cl. 0,5 Art.-no.	1 A Cl. 1 Art.-no.	1 A Cl. 0,5 Art.-no.
60	1	29042			
80	1,5	29045		29245	
100	1,5	29047	29011	29247	29211
	2,5	29048		29248	
150	1,5	29049	29013	29249	29213
	2,5	29050		29250	29214
200	2,5	29052	29016	29252	29216
	3,75	29054		29254	
	5			29253	
250	2,5	29055	29019	29255	29219
	5	29056	29020	29256	
300	2,5	29059	29023	29259	29223
	5	29060	29024	29260	29224
400	2,5	29063	29027	29263	29227
	5	29064	29028	29264	29228
	7,5	29077		29277	
	10	29065		29265	
500	2,5	29066	29030	29266	29230
	5	29067	29031	29267	29231
	10	29068		29268	
600	2,5	29069	29033	29269	29233
	5	29070	29034	29270	29234
	10	29071	29035	29271	29235

		Art.-no.
	Snap-on mounting, type A	**53011**
	Sealed shutter, type A	**59040**

ASK 41.4

Plug-in current transformer

Busbar 1	40 x 10 mm
Busbar 2	2 x 30 x 5 mm
Round conductor	32 mm
Transformer width	71 mm
Height	85,5 mm
Depth	58 mm

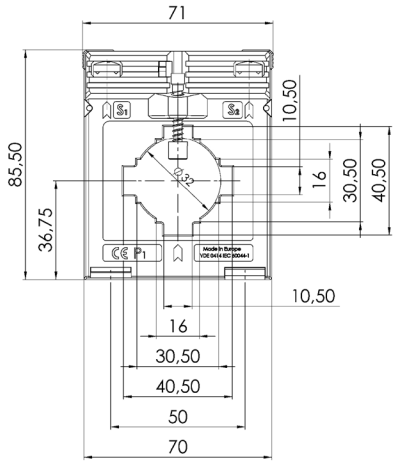

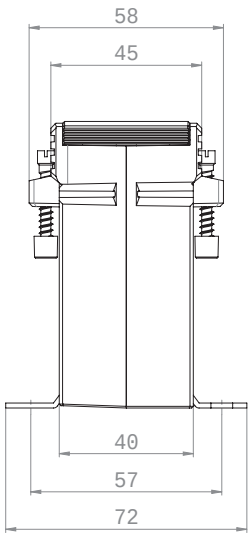

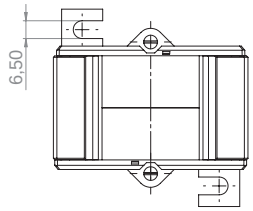

	Secondary current [A] / Class				
Primary current [A]	Burden [VA]	5 A Cl. 1 Art.-no.	5 A Cl. 0,5 Art.-no.	5 A Cl. 0,2s Art.-no.	1 A Cl. 1 Art.-no.	1 A Cl. 0,5 Art.-no.
50	1,25	13180				
	1,5	13036				
60	1,25	13181				
	1,5	13037				
75	1,5	13039			13239	
80	1,5	13041			13241	
	2,5	13042			13242	
100	1,5	13043	13011		13243	13211
	2,5	13044	13083		13244	13283
	3,75	13179			13245	
150	1,5	13046	13012	V24-1604C	13246	13212
	2,5	13047	13013		13247	13213
	5	13048			13248	
200	1,5		13014	V24-1704C		13214
	2,5	13049	13015	V24-1704D	13249	13215
	5	13050	13085		13250	13285
	10	13051			13251	
250	1,5		13016	V24-1804C		13216
	2,5	13052	13017	V24-1804D	13252	13217
	5	13053	13086	V24-1804F	13253	13286
	10	13054			13254	
300	2,5	13055	13018	V24-1904D	13255	13218
	5	13056	13019	V24-1904F	13256	13219
	10	13057	13087		13257	13287
	15	13058			13258	
400	2,5	13059	13020	V24-2004D	13259	13220
	5	13060	13021	V24-2004F	13260	13221
	10	13061	13088	V24-2004H	13261	13288
	15	13062			13262	
500	2,5	13063	13022	V24-2104D	13263	13222
	5	13064	13023	V24-2104F	13264	13223
	10	13065	13024	V24-2104H	13265	13224
	15	13066	13089		13266	13289
600	2,5	13067	13025	V24-2204D	13267	13225
	5	13068	13026	V24-2204F	13268	13226
	10	13069	13027		13269	13227
	15	13070	13090		13270	
750	2,5			V24-2304D		
	5	13071	13028	V24-2304F	13271	13228
	10	13072	13029	V24-2304H	13272	13229
	15	13073			13273	13291
800	5	13075	13030		13275	13230
	10	13076	13031		13276	13231
	15	13077			13277	
1000	5	13079	13032		13279	13232
	10	13080	13033		13280	13233

		Art.-no.
	Snap-on mounting, type D	**55012**
	Sealed shutter, type B	**59041**

Busbar 1	40 x 10 mm
Busbar 2	2 x 30 x 5 mm
Round conductor	32 mm
Transformer width	71 mm
Height	85,5 mm
Depth	58 mm

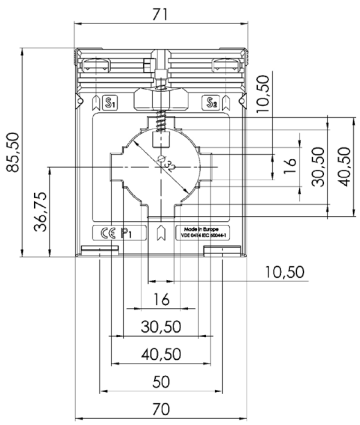

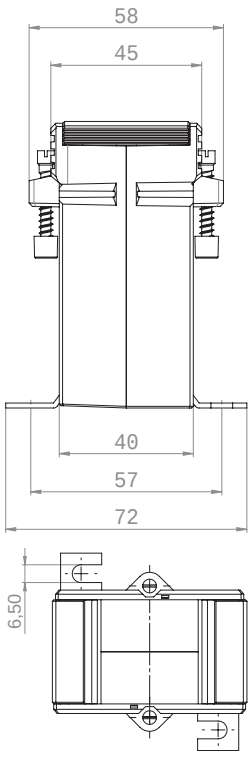

ASK 41.4 2U

Plug-in current transformer, secondary reconnectable

		Secondary current [A] / Class	
Primary current [A]	Burden [VA]	5 A Cl. 1 Art.-no.	1 A Cl. 1 Art.-no.
200-100	5-2,5	13133	13333
300-150	5-2,5	13134	13334
	10-5	13135	13335
400-200	5-2,5	13136	13336
	10-5	13137	13337
500-250	5-2,5	13138	13338
	10-5	13139	13339
600-300	5-2,5	13140	13340
	10-5	13141	13341
800-400	5-2,5	13142	13342
	10-5	13143	13343
	15-7,5	13144	13344
1000-500	5-2,5	13145	13345
	10-5	13146	13346
	15-7,5	13147	13347

ASK 41.4 3U

Plug-in current transformer, secondary reconnectable

		Secondary current [A] / Class	
Primary current [A]	Burden [VA]	5 A Cl. 1 Art.-no.	1 A Cl. 1 Art.-no.
400-200-100	10-5-2,5	13163	13363
600-300-150	10-5-2,5	13164	13364
800-400-200	10-5-2,5	13165	13365
1000-500-250	10-5-2,5	13166	13366
	15-7,5-2,5	13167	13367

		Art.-no.
	Snap-on mounting, type D	**55012**
	Sealed shutter, type B	**59041**

ASK 541.4

Plug-in current transformer

Busbar 1	40 x 10 mm
Busbar 2	2 x 30 x 5 mm
Round conductor	32 mm
Transformer width	86 mm
Height	98,5 mm
Depth	58 mm

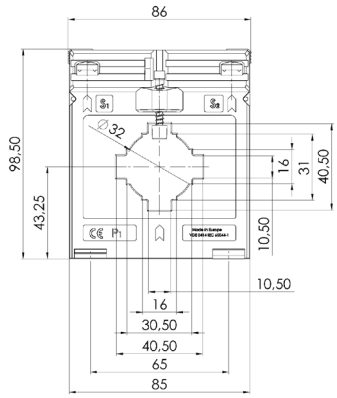

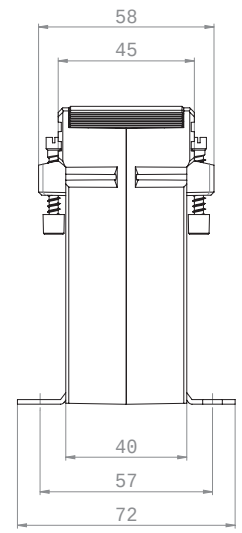

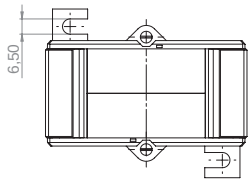

		Secondary current [A] / Class				
Primary current [A]	Burden [VA]	5 A Cl. 1 Art.-no.	5 A Cl. 0,5 Art.-no.	5 A Cl. 0,2s Art.-no.	1 A Cl. 1 Art.-no.	1 A Cl. 0,5 Art.-no.
30	1	15340			15248	
	1,5	15048				
40	1,5	15049			15249	
50	1,5	15051			15251	
60	1,5	15053	15013		15253	15213
	2,5	15054			15254	
75	1,5	15055	15014		15255	15214
	2,5	15056	15100		15256	15300
80	2,5	15057	15016		15257	15216
100	2,5	15114	15017		15314	15217
	5	15059			15259	
125	2,5		15019			15219
	5	15061			15261	
150	2,5	15063	15021		15263	15221
	5	15064			15264	
	10	15065			15265	
200	2,5		15023	V33-1704D		15223
	5	15066	15024	V33-1704F	15266	15224
	10	15067	15101		15267	15301
	15	15068	15102		15268	15302
250	2,5		15025	V33-1804D		15225
	5	15069	15026	V33-1804F	15269	15226
	10	15070	15103	V33-1804H	15270	15303
	15	15071	15104		15271	15304
300	2,5		15027	V33-1904D		15227
	5	15072	15028	V33-1904F	15272	15228
	10	15073	15029	V33-1904H	15273	15229
	15	15074	15105		15274	15305
400	2,5		15030	V33-2004D		15230
	5	15075	15031	V33-2004F	15275	15231
	10	15076	15032	V33-2004H	15276	15232
	15	15077	15139		15277	15339
500	2,5			V33-2104D		
	5	15098	15033	V33-2104F	15313	15233
	10	15078	15034	V33-2104H	15278	15234
	15	15079	15035	V33-2104J	15279	15235
	30	15080			15280	
600	2,5			V33-2204D		
	5	15095	15036	V33-2204F	15293	15236
	10	15081	15037	V33-2204H	15281	15237
	15	15082	15038	V33-2204J	15282	15238
	30	15083	15039		15283	15239
750	2,5			V33-2304D		
	5			V33-2304F		
	10	15084	15040	V33-2304H	15284	15240
	15	15085	15041	V33-2304J	15285	15241
	30	15086	15042		15286	15242

		Secondary current [A] / Class				
Primary current [A]	Burden [VA]	5 A Cl. 1 Art.-no.	5 A Cl. 0,5 Art.-no.	5 A Cl. 0,2s Art.-no.	1 A Cl. 1 Art.-no.	1 A Cl. 0,5 Art.-no.
800	10	15087	15043		15287	15243
	15	15088	15044		15288	15244
	30	15089	15106		15289	15306
1000	2,5			V33-2504D		
	5		15045	V33-2504F		15245
	10	15090	15046	V33-2504H	15290	15246
	15	15091	15047	V33-2504J	15291	15247
	30	15092	15012		15292	

		Art.-no.
	Snap-on mounting	**–**
	Sealed shutter, type C	**59042**

ASK 41.5

Plug-in current transformer

Busbar 1	40 x 10 mm
Busbar 2	2 x 30 x 5 mm
Round conductor	32 mm
Transformer width	71 mm
Height	85,5 mm
Depth	68 mm

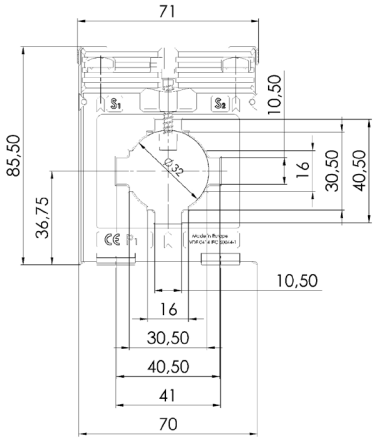

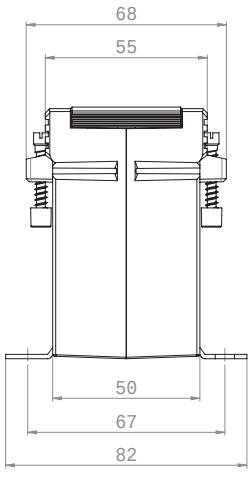

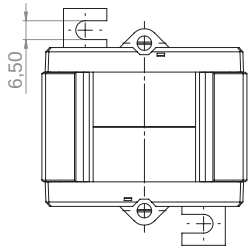

	Secondary current [A] / Class			
Primary current [A]	Burden [VA]	5 A Cl. 1 Art.-no.	5 A Cl. 0,5 Art.-no.	1 A Cl. 1 Art.-no.	1 A Cl. 0,5 Art.-no.
60	1,5	1010006002		1010206002	
75	1,5	1010006004	1010005001	1010206004	1010205001
	2,5	1010006005	1010005002	1010206005	1010205002
80	1,5	1010006006	1010005003	1010206006	1010205003
	2,5	1010006007	1010005004	1010206007	1010205004
100	1,5	1010006008	1010005005	1010206008	1010205005
	2,5	1010006009	1010005006	1010206009	1010205006
	3,75	1010006046		1010206010	
150	2,5	1010006010	1010005007	1010206011	1010205007
	5	1010006011		1010206012	
	7,5	1010006012		1010206013	
200	2,5	1010006013	1010005010	1010206014	1010205010
	5	1010006014	1010005011	1010206015	1010205011
	10	1010006048		1010206016	
250	2,5	1010006015	1010005012	1010206017	1010205013
	5	1010006016	1010005013	1010206018	1010205014
	10	1010006017	1010005014	1010206019	1010205015
	15	1010006047		1010206020	
300	2,5	1010006018	1010005015	1010206021	1010205017
	5	1010006019	1010005016	1010206022	1010205018
	10	1010006020	1010005017	1010206023	1010205019
	15	1010006021		1010206024	
400	2,5	1010006022	1010005019	1010206025	1010205021
	5	1010006023	1010005020	1010206026	1010205022
	10	1010006024	1010005021	1010206027	1010205023
	15	1010006025	1010005022	1010206028	1010205024
500	2,5	1010006026	1010005023	1010206029	1010205025
	5	1010006027	1010005024	1010206030	1010205026
	10	1010006028	1010005025	1010206031	1010205027
	15	1010006029	1010005026	1010206032	1010205028
600	2,5	1010006030	1010005027	1010206033	1010205029
	5	1010006031	1010005028	1010206034	1010205030
	10	1010006032	1010005029	1010206035	1010205031
	15	1010006033	1010005030	1010206036	1010205032
750	2,5	1010006034	1010005031	1010206037	1010205033
	5	1010006035	1010005032	1010206038	1010205034
	10	1010006036	1010005033	1010206039	1010205035
	15	1010006037	1010005034	1010206040	1010205036
800	2,5	1010006038	1010005035	1010206041	1010205037
	5	1010006039	1010005036	1010206042	1010205038
	10	1010006040	1010005037	1010206043	1010205039
	15	1010006041		1010206044	
1000	2,5	1010006042	1010005039	1010206045	1010205041
	5	1010006043	1010005040	1010206046	1010205042
	10	1010006044	1010005041	1010206047	1010205043
	15	1010006045		1010206048	

		Art.-no.
	Snap-on mounting, type C	**55011**
	Sealed shutter, type B	**59041**

ASK 41.3

Plug-in current transformer

Busbar 1	40 x 12 mm
Busbar 2	32 x 18 mm
Round conductor	26 mm
Transformer width	61 mm
Height	75,5 mm
Depth	48 mm

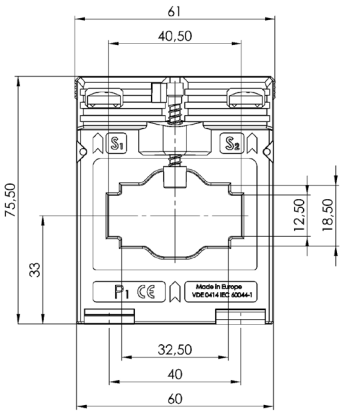

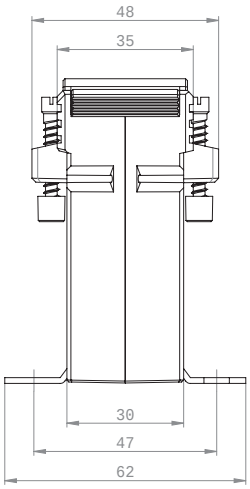

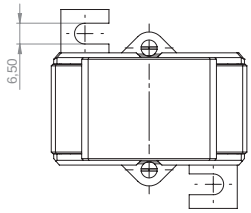

	Secondary current [A] / Class	
Primary current [A]	Burden [VA]	5 A Cl. 1 Art.-no.	1 A Cl. 1 Art.-no.
100	1	11037	11237
	1,5	11038	11238
150	1,5	11039	11239
	2,5	11040	11240
200	1,5	11041	11241
	2,5	11042	11242
250	1,5	11043	11243
	2,5	11044	11244
300	1,5	11046	11246
	2,5	11047	11247
	5	11048	11248
400	1,5	11049	
	2,5	11050	
	5	11051	
500	1,5	11052	
	2,5	11053	
	5	11054	
600	1,5	11056	
	2,5	11057	
	5	11058	
750	2,5	11060	
	5	11061	
	10	11062	

		Art.-no.
	Snap-on mounting, type A	**53011**
	Sealed shutter, type A	**59040**

ASK 412.4

Plug-in current transformer

Busbar 1	40 x 12 mm
Busbar 2	30 x 15 mm
Round conductor	30,5 mm
Transformer width	71 mm
Height	85,5 mm
Depth	58 mm

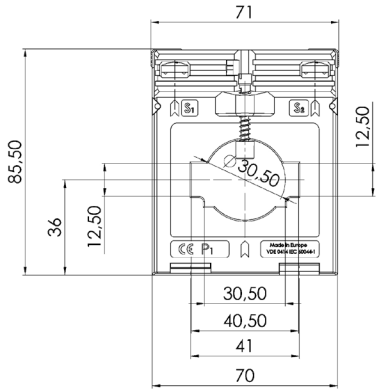

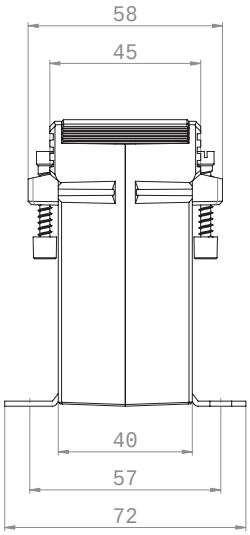

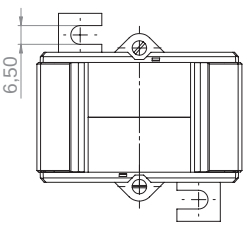

	Secondary current [A] / Class			
Primary current [A]	Burden [VA]	5 A Cl. 1 Art.-no.	5 A Cl. 0,5 Art.-no.	1 A Cl. 1 Art.-no.	1 A Cl. 0,5 Art.-no.
50	1,25	28036		28236	
	1,5	28037		28237	
60	1,25	28038		28238	
	1,5	28039		28239	
75	1,5	28040		28240	
	2,5	28041		28241	
80	1,5	28042		28242	
	2,5	28043		28243	
100	1,5	28044	28011	28244	28211
	2,5	28045		28245	
	3,75	28046		28246	
150	1,5	28047	28012	28247	28212
	2,5	28048	28013	28248	28213
	5	28049		28249	
200	2,5	28051	28015	28251	28215
	5	28052	28098	28252	28298
	7,5	28086		28286	
	10	28053			
250	1,5	28054	28016	28254	28216
	2,5	28055	28017	28255	28217
	5	28056	28014	28256	28214
	10	28057		28257	
300	2,5	28058	28018	28258	28218
	5	28059	28019	28259	28219
	10	28060		28260	
	15	28061		28261	
400	2,5	28062	28020	28262	28220
	5	28063	28021	28263	28221
	10	28064	28009	28264	28209
	15	28065		28265	
500	2,5	28066	28022	28266	28222
	5	28067	28023	28267	28223
	10	28068	28024	28268	28224
	15	28069		28269	
600	2,5	28070	28025	28270	28225
	5	28071	28026	28271	28226
	10	28072	28027	28272	28227
	15	28073		28273	
750	5	28074	28028	28274	28228
	10	28075	28029	28275	28229
	15	28076	28010	28276	28210
800	5	28078	28030	28278	28230
	10	28079	28031	28279	28231
	15	28080	28035	28280	28235

		Art.-no.
	Snap-on mounting, type D	**55012**
	Sealed shutter, type B	**59041**

Busbar 1	40 x 12 mm
Busbar 2	30 x 15 mm
Round conductor	30,5 mm
Transformer width	71 mm
Height	85,5 mm
Depth	58 mm

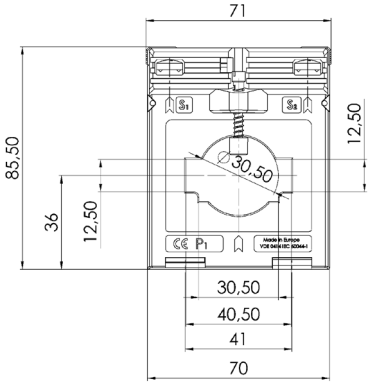

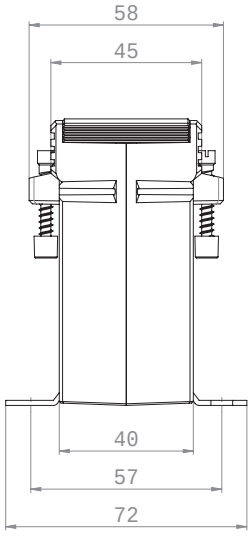

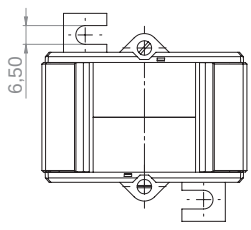

ASK 412.4 2U

Plug-in current transformer, secondary reconnectable

		Secondary current [A] / Class	
Primary current [A]	Burden [VA]	5 A Cl. 1 Art.-no.	1 A Cl. 1 Art.-no.
200-100	5-2,5	28133	28333
300-150	5-2,5	28134	28334
	10-5	28135	28335
400-200	5-2,5	28136	28336
	10-5	28137	28337
500-250	5-2,5	28138	28338
	10-5	28139	28339
600-300	5-2,5	28140	28340
	10-5	28141	28341
800-400	5-2,5	28143	28343
	10-5	28144	28344
	15-7,5	28145	28345

ASK 412.4 3U

Plug-in current transformer, secondary reconnectable

		Secondary current [A] / Class	
Primary current [A]	Burden [VA]	5 A Cl. 1 Art.-no.	1 A Cl. 1 Art.-no.
400-200-100	10-5-2,5	28163	28363
600-300-150	10-5-2,5	28164	28364
800-400-200	10-5-2,5	28165	28365

		Art.-no.
	Snap-on mounting, type D	**55012**
	Sealed shutter, type B	**59041**

ASK 41.6

Plug-in current transformer

Busbar 1	40 x 12 mm
Busbar 2	30 x 15 mm
Round conductor	32 mm
Transformer width	95 mm
Height	116 mm
Depth	74 mm

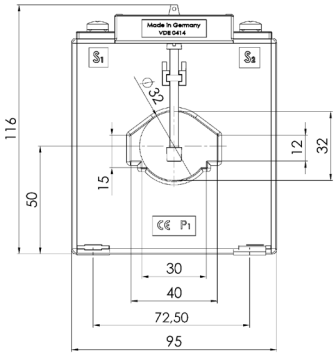

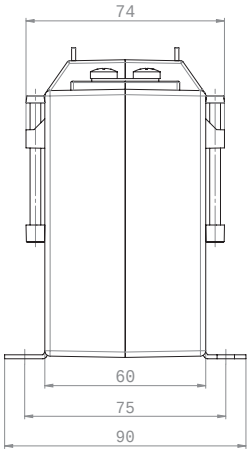

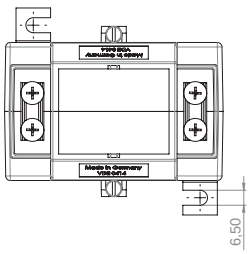

		Secondary current [A] / Class			
Primary current [A]	Burden [VA]	5 A Cl. 1 Art.-no.	5 A Cl. 0,5 Art.-no.	1 A Cl. 1 Art.-no.	1 A Cl. 0,5 Art.-no.
50	1,5	14060	14011	14260	14211
60	1,5	14062	14012	14262	14212
	2,5	14063		14263	
75	1,5	14064		14264	
	2,5	14065	14013	14265	14213
	3,75	14134		14334	
80	2,5	14067	14015	14267	14215
	3,75	14135		14335	
100	2,5	14069	14017	14269	14217
	5	14070	14018	14270	14218
	7,5	14136		14336	
150	5	14072	14021	14272	14221
	10	14073		14273	
	15	14074		14274	
200	5	14075	14025	14275	14225
	10	14076	14026	14276	14226
	15	14077		14277	
250	5	14078	14029	14278	14229
	10	14079	14030	14279	14230
	15	14080	14031	14280	14231
300	5	14081	14033	14281	14233
	10	14082	14034	14282	14234
	15	14083	14035	14283	14235
400	5	14084	14037	14284	14237
	10	14085	14038	14285	14238
	15	14086	14039	14286	14239
500	5	14087	14041	14287	14241
	10	14088	14042	14288	14242
	15	14089	14043	14289	14243
	30	14137		14337	
600	10	14090	14045	14290	14245
	15	14091	14046	14291	14246
	30	14092	14047	14292	14247
750	10	14094	14049	14294	14249
	15	14095	14050	14295	14250
	30	14096	14051	14296	14251
800	10	14098	14053	14298	14253
	15	14099	14054	14299	14254
	30	14100	14055	14300	14255
1000	10	14102	14057	14302	14257
	15	14103	14058	14303	14258
	30	14104	14059	14304	14259

		Art.-no.
	Snap-on mounting	**–**
	Sealed shutter, type E	**59044**

ASK 51.4

Plug-in current transformer

Busbar 1	50 x 12 mm
Busbar 2	2 x 40 x 10 mm
Round conductor	44 mm
Transformer width	86 mm
Height	98,5 mm
Depth	58 mm

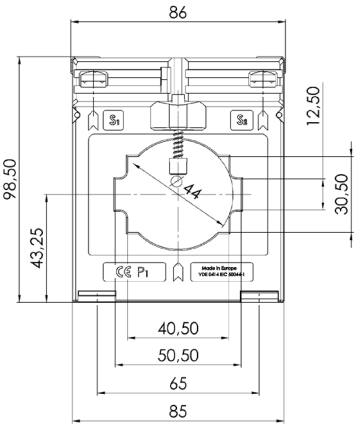

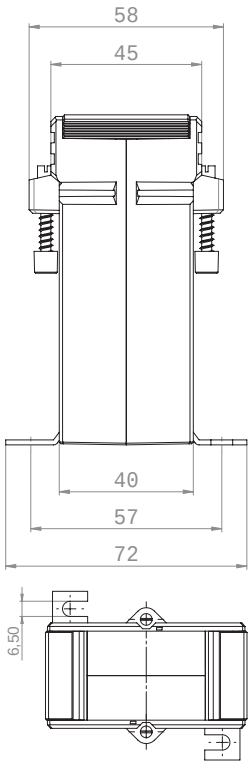

	Secondary current [A] / Class				
Primary current [A]	Burden [VA]	5 A Cl. 1 Art.-no.	5 A Cl. 0,5 Art.-no.	5 A Cl. 0,2s Art.-no.	1 A Cl. 1 Art.-no.	1 A Cl. 0,5 Art.-no.
100	1,5	16043			16243	
150	1,5	16044	16011		16244	16211
	2,5	16045	16010		16245	16210
200	1,5		16012	V34-1704C		16212
	2,5	16046	16013	V34-1704D	16246	16213
	5	16047	16152	V34-1704F	16247	16352
250	1,5		16014			16214
	2,5	16048	16015	V34-1804D	16248	16215
	5	16049	16153	V34-1804F	16249	16353
	10	16177			16390	
300	2,5	16050	16017	V34-1904D	16250	16217
	5	16051	16018	V34-1904F	16251	16218
	10	16052			16252	
400	2,5	16053	16019	V34-2004D	16253	16219
	5	16054	16020	V34-2004F	16254	16220
	10	16055	16021	V34-2004H	16255	16221
	15				16256	
500	2,5	16057	16022	V34-2104D	16257	16222
	5	16058	16023	V34-2104F	16258	16223
	10	16059	16024	V34-2104H	16259	16224
	15	16060	16202		16260	
600	2,5	16061	16025	V34-2204D	16261	16225
	5	16062	16026	V34-2204F	16262	16226
	10	16063	16027	V34-2204H	16263	16227
	15	16064	16154		16264	16354
750	2,5	16065	16028	V34-2304D	16265	16228
	5	16066	16029	V34-2304F	16266	16229
	10	16067	16030	V34-2304H	16267	16230
	15	16068	16203		16268	16355
800	5	16069	16031	V34-2404F	16269	16231
	10	16070	16032	V34-2404H	16270	16232
	15	16071	16033		16271	16233
1000	2,5			V34-2504D		
	5	16073	16034	V34-2504F	16273	16234
	10	16074	16035	V34-2504H	16274	16235
	15	16075	16036	V34-2504J	16275	16236
1200	5	16077	16037		16277	16237
	10	16078	16038		16278	16238
	15	16079	16039		16279	16239
	30	16080			16280	
1250	5	16081	16040		16281	16240
	10	16082	16041		16282	16241
	15	16083	16042		16283	16242
	30	16084			16284	

		Art.-no.
	Snap-on mounting	–
	Sealed shutter, type C	**59042**

ASK 51.4 2U

Plug-in current transformer, secondary reconnectable

Busbar 1	50 x 12 mm
Busbar 2	2 x 40 x 10 mm
Round conductor	44 mm
Transformer width	86 mm
Height	98,5 mm
Depth	58 mm

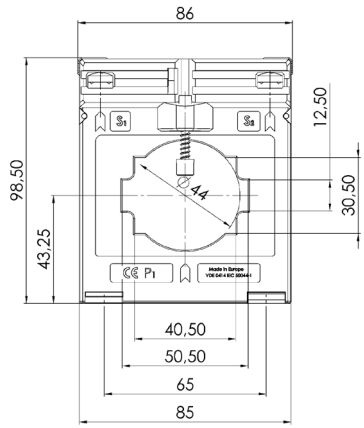

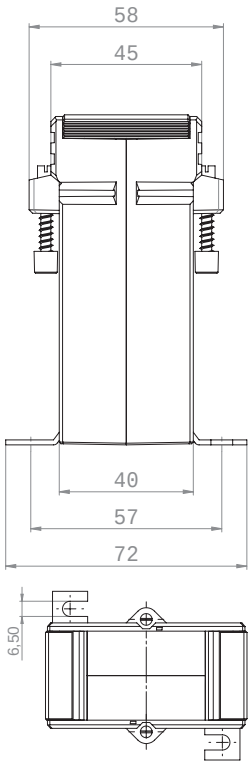

	Secondary current [A] / Class	
Primary current [A]	Burden [VA]	5 A Cl. 1 Art.-no.	1 A Cl. 1 Art.-no.
400-200	5-2,5	16130	16330
	10-5	16131	16331
500-250	5-2,5	16132	16332
	10-5	16133	16333
600-300	5-2,5	16134	16334
	10-5	16135	16335
800-400	5-2,5	16136	16336
	10-5	16137	16337
	15-7,5	16138	16338
1000-500	5-2,5	16139	16339
	10-5	16140	16340
	15-7,5	16141	16341
1200-600	5-2,5	16142	16342
	10-5	16143	16343
	15-7,5	16144	16344
	30-15	16145	16345

ASK 51.4 3U

Plug-in current transformer, secondary reconnectable

	Secondary current [A] / Class		
Primary current [A]	Burden [VA]	5 A Cl. 1 Art.-no.	1 A Cl. 1 Art.-no.
600-400-200	15-7,5-5	16178	16378
800-400-200	10-5-2,5	16162	16362
1000-500-250	10-5-2,5	16163	16363
	15-7,5-2,5	16164	16364
1000-600-300	10-5-2,5	16180	16380
	15-10-5	16176	16376
1000-600-400	10-5-2,5	16175	16375
1000-800-600	15-10-5	16179	16379
1200-600-300	10-5-2,5	16165	16365
	15-7,5-2,5	16166	16366
1200-1000-300	7,5-5-2,5	16174	16374

		Art.-no.
	Snap-on mounting	**–**
	Sealed shutter, type C	**59042**

ASK 51.6

Plug-in current transformer

Busbar 1	50 x 12 mm
Busbar 2	40 x 30 mm
Round conductor	40 mm
Transformer width	95 mm
Height	116 mm
Depth	74 mm

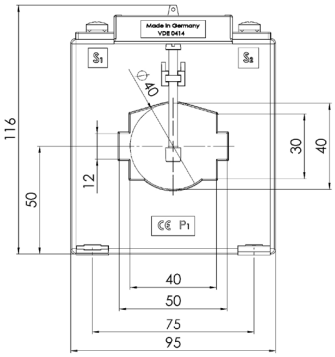

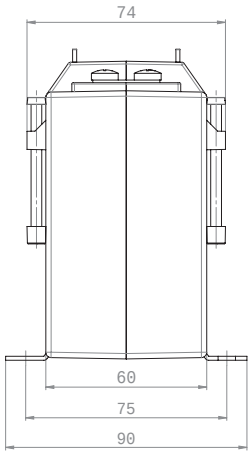

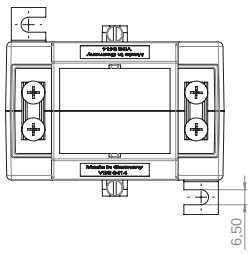

		Secondary current [A] / Class			
Primary current [A]	Burden [VA]	5 A Cl. 1 Art.-no.	5 A Cl. 0,5 Art.-no.	1 A Cl. 1 Art.-no.	1 A Cl. 0,5 Art.-no.
100	2,5	17058		17258	
	5	17059		17259	
150	2,5	17060	17013	17260	17213
	5	17061	17014	17261	17214
	10	17062		17262	
200	2,5	17063	17016	17263	17216
	5	17064	17017	17264	17217
	10	17065	17018	17265	17218
250	2,5	17066	17019	17266	17219
	5	17067	17020	17267	17220
	10	17068	17021	17268	17221
	15	17069	17022	17269	17222
300	5	17070	17024	17270	17224
	10	17071	17025	17271	17225
	15	17072	17026	17272	17226
	30	17073		17273	
400	5	17074	17028	17274	17228
	10	17075	17029	17275	17229
	15	17076	17030	17276	17230
	30	17077		17277	
500	5	17078	17032	17278	17232
	10	17079	17033	17279	17233
	15	17080	17034	17280	17234
	30	17081		17281	
600	5	17082	17036	17282	17236
	10	17083	17037	17283	17237
	15	17084	17038	17284	17238
	30	17085		17285	
750	5	17086	17040	17286	17240
	10	17087	17041	17287	17241
	15	17088	17042	17288	17242
	30	17089		17289	
800	10	17090	17044	17290	17244
	15	17091	17045	17291	17245
	30	17092		17292	
	45	17093		17293	
1000	10	17094	17047	17294	17247
	15	17095	17048	17295	17248
	30	17096	17049	17296	17249
	45	17097		17297	
1200	10	17098	17051	17298	17251
	15	17099	17052	17299	17252
	30	17100	17053	17300	17253
	45	17101		17301	
1250	10	17102	17055	17302	17255
	15	17103	17056	17303	17256
	30	17104	17057	17304	17257
	45	17105		17305	

		Art.-no.
	Snap-on mounting	**–**
	Sealed shutter, type E	**59044**

ASK 561.4

Plug-in current transformer

Busbar 1	60 x 10 mm
Busbar 2	30 x 40 mm
Busbar 3	2 x 50 x 10 mm
Round conductor	44 mm
Transformer width	86 mm
Height	98,5 mm
Depth	58 mm

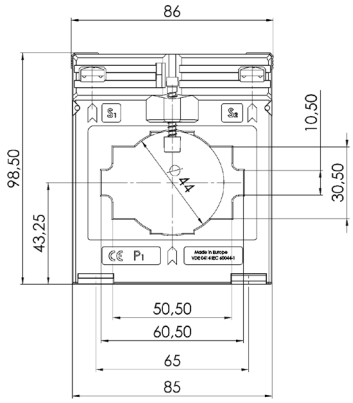

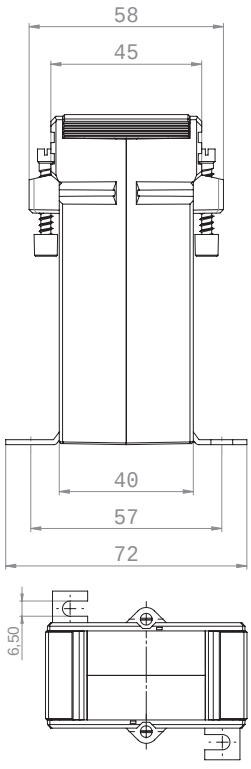

	Secondary current [A] / Class			
Primary current [A]	Burden [VA]	5 A Cl. 1 Art.-no.	5 A Cl. 0,5 Art.-no.	1 A Cl. 1 Art.-no.	1 A Cl. 0,5 Art.-no.
200	2,5	18036		18236	
250	2,5	18037		18237	
	5	18038		18238	
300	2,5	18039	18012	18239	18212
	5	18040		18240	
400	2,5	18042	18014	18242	18214
	5	18043	18015	18243	18215
	10	18044		18244	
500	2,5		18016		18216
	5	18045	18017	18245	18217
	10	18046		18246	
	15	18047		18247	
600	2,5		18018		18218
	5	18048	18019	18248	18219
	10	18049	18020	18249	18220
	15	18050		18250	
750	2,5		18021		18221
	5	18051	18022	18251	18222
	10	18052	18023	18252	18223
	15	18053		18253	
800	5	18097	18024	18297	18224
	10	18054	18025	18254	18225
	15	18055	18026	18255	18226
1000	5	18104	18027	18304	18227
	10	18057	18028	18257	18228
	15	18058	18029	18258	18229
	30	18059		18259	
1200	5	18100	18030	18267	18230
	10	18060	18031	18260	18231
	15	18061	18032	18261	18232
	30	18062		18262	
1250	5	18102	18033	18302	18233
	10	18063	18034	18263	18234
	15	18064	18035	18264	18235

		Art.-no.
	Snap-on mounting	**–**
	Sealed shutter, type C	**59042**

ASK 61.4

Plug-in current transformer

Busbar 1	63 x 10 mm
Busbar 2	2 x 50 x 10 mm
Round conductor	44 mm
Transformer width	96 mm
Height	105,5 mm
Depth	58 mm

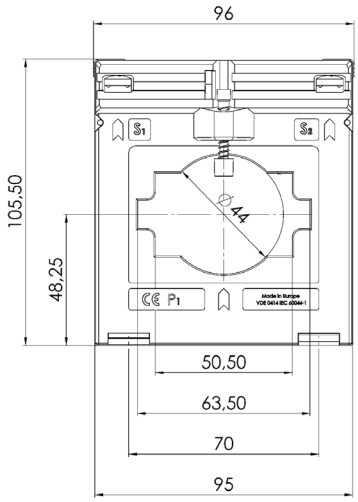

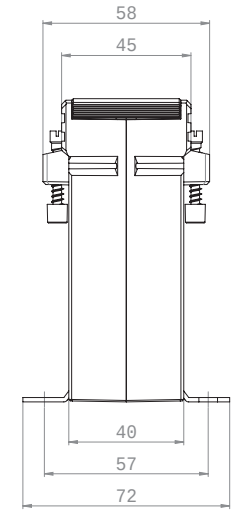

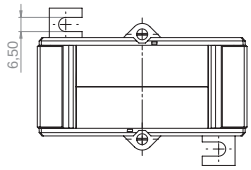

		Secondary current [A] / Class				
Primary current [A]	Burden [VA]	5 A Cl. 1 Art.-no.	5 A Cl. 0,5 Art.-no.	5 A Cl. 0,2s Art.-no.	1 A Cl. 1 Art.-no.	1 A Cl. 0,5 Art.-no.
200	1,5	19047	19009		19247	19209
	2,5	19048	19010		19248	19210
250	1,5	19049	19011	V41-1804C	19249	19211
	2,5	19050	19012	V41-1804D	19250	19212
	5	19111			19175	
300	1,5	19051	19013		19251	19213
	2,5	19052	19014	V41-1904D	19252	19214
	5	19053	19015	V41-1904F	19253	19215
400	1,5	19054	19016		19254	19216
	2,5	19055	19017	V41-2004D	19255	19217
	5	19056	19018	V41-2004F	19256	19218
	10	19057	19094	V41-2004H	19257	19294
500	1,5		19019			19219
	2,5	19058	19020	V41-2104D	19258	19220
	5	19059	19021	V41-2104F	19259	19221
	10	19060	19095	V41-2104H	19260	19295
	15	19061			19261	
600	2,5	19062	19022	V41-2204D	19262	19222
	5	19063	19023	V41-2204F	19263	19223
	10	19064	19024	V41-2204H	19264	19224
	15	19065	19097	V41-2204J	19265	19297
750	2,5	19066	19025	V41-2304D	19266	19225
	5	19067	19026	V41-2304F	19267	19226
	10	19068	19027	V41-2304H	19268	19227
	15	19069	19098	V41-2304J	19269	19298
800	2,5	19070	19028		19270	19228
	5	19071	19029		19271	19229
	10	19072	19030		19272	19230
	15	19073	19031		19273	19231
1000	2,5			V41-2504D		
	5	19074	19032	V41-2504F	19274	19232
	10	19075	19033	V41-2504H	19275	19233
	15	19076	19034	V41-2504J	19276	19234
1200	2,5			V41-2604D		
	5	19078	19035	V41-2604F	19278	19235
	10	19079	19036	V41-2604H	19279	19236
	15	19080	19037	V41-2604J	19280	19237
	30	19081	19100		19281	19300

		Secondary current [A] / Class				
Primary current [A]	Burden [VA]	5 A Cl. 1 Art.-no.	5 A Cl. 0,5 Art.-no.	5 A Cl. 0,2s Art.-no.	1 A Cl. 1 Art.-no.	1 A Cl. 0,5 Art.-no.
1250	5	19082	19038	V41-2704F	19282	19238
	10	19083	19039	V41-2704H	19283	19239
	15	19084	19040	V41-2704J	19284	19240
	30	19085	19101		19285	19301
1500	5	19086	19041	V41-2804F	19286	19241
	10	19087	19042	V41-2804H	19287	19242
	15	19088	19043	V41-2804J	19288	19243
	30	19089	19102		19289	19302
1600	5	19090	19044		19290	19244
	10	19091	19045		19291	19245
	15	19092	19046		19292	19246
	30	19093	19103		19293	19303

		Art.-no.
	Snap-on mounting	**–**
	Sealed shutter, type C	**59042**

• Please note: Current transformers in cl. 0.2S are only deliverable for busbar 60x10 mm

Busbar 1	63 x 10 mm
Busbar 2	2 x 50 x 10 mm
Round conductor	44 mm
Transformer width	96 mm
Height	105,5 mm
Depth	58 mm

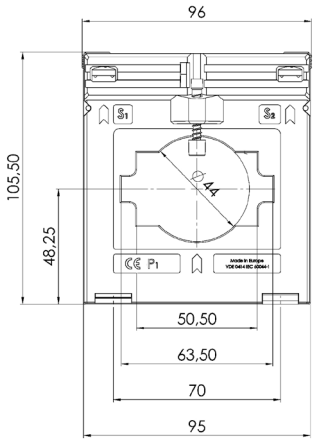

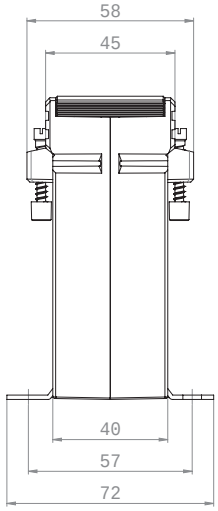

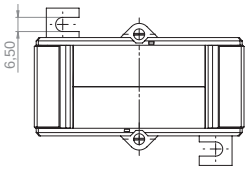

ASK 61.4 2U

Plug-in current transformer, secondary reconnectable

		Secondary current [A] / Class	
Primary current [A]	Burden [VA]	5 A Cl. 1 Art.-no.	1 A Cl. 1 Art.-no.
500-250	5-2,5	19141	19341
600-300	5-2,5	19142	19342
	10-5	19143	19343
800-400	5-2,5	19144	19344
	10-5	19145	19345
	15-7,5	19146	19346
1000-500	5-2,5	19147	19347
	10-5	19148	19348
	15-7,5	19149	19349
1200-600	5-2,5	19150	19350
	10-5	19151	19351
	15-7,5	19152	19352

ASK 61.4 3U

Plug-in current transformer, secondary reconnectable

		Secondary current [A] / Class	
Primary current [A]	Burden [VA]	5 A Cl. 1 Art.-no.	1 A Cl. 1 Art.-no.
800-400-200	10-5-2,5	19182	19382
1000-500-250	10-5-2,5	19183	19383
	15-7,5-2,5	19184	19384
1000-600-300	10-5-2,5	19185	19385
	15-7,5-2,5	19186	19386
1000-600-400	10-5-2,5	19199	19399
1200-600-300	10-5-2,5	19187	19387
	15-7,5-2,5	19188	19388

		Art.-no.
	Snap-on mounting	**–**
	Sealed shutter, type C	**59042**

ASK 615.3

Plug-in current transformer

Busbar: 60,6 x 15,15 mm
Round conductor: 52 mm
Transformer width: 90 mm
Height: 114,40 mm
Depth: 30 mm

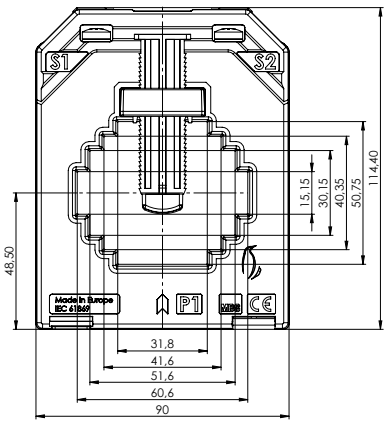

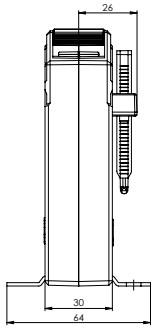

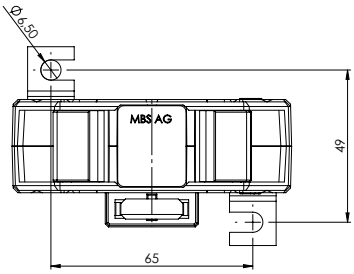

		Secondary current [A] / Class				
Primary current [A]	Burden [VA]	5A Cl. 1 Art.-no.	5A Cl. 0,5 Art.-no.	5A Cl. 0,5s Art.-no.	5A Cl. 0,2 Art.-no.	5A Cl. 0,2s Art.-no.
200	2.5	6153-10000				
250	1		6153-10500			
	2.5	6153-10001				
300	1		6153-10501			
	2.5	6153-10003	6153-10502			
400	1			6153-10600		
	2.5	6153-10006	6153-10503	6153-10601		
	3.75	6153-10007	6153-10504			
	5	6153-10008				
500	2.5	6153-10009	6153-10505	6153-10602		
	5	6153-10010	6153-10506	6153-10603		
600	2.5	6153-10012	6153-10508	6153-10604	6153-10900	
	5	6153-10013	6153-10509	6153-10605		
	7.5	6153-10014	6153-10510			
750	2.5	6153-10015	6153-10511	6153-10607	6153-10901	
	5	6153-10016	6153-10512	6153-10608		
	7.5	6153-10017	6153-10513	6153-10609		
800	2.5	6153-10018	6153-10514	6153-10610	6153-10902	
	5	6153-10019	6153-10515	6153-10611		
	7.5	6153-10020	6153-10516	6153-10612		
1000	2.5	6153-10022	6153-10518		6153-10903	6153-10400
	5	6153-10023	6153-10519	6153-10613	6153-10904	6153-10401
	10	6153-10024	6153-10520	6153-10614	6153-10905	
1250	2.5					6153-10402
	5	6153-10025	6153-10522	6153-10616	6153-10906	6153-10403
	10	6153-10026	6153-10523	6153-10617	6153-10907	
	15	6153-10027	6153-10524	6153-10618	6153-10908	

Included: Slider for fixing to the Busbar.

ASK 615.3

Busbar: 60,6 x 15,15 mm
Round conductor: 52 mm
Transformer width: 90 mm
Height: 114,40 mm
Depth: 30 mm

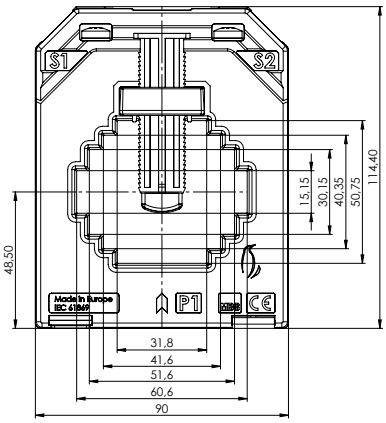

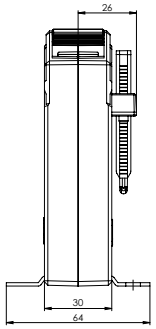

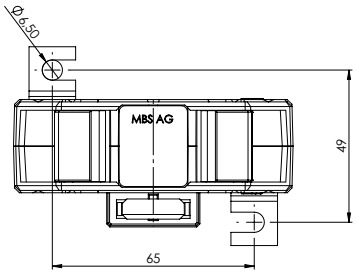

		Secondary current [A] / Class				
Primary current [A]	Burden [VA]	5A Cl. 1 Art.-no.	5A Cl. 0,5 Art.-no.	5A Cl. 0,5s Art.-no.	5A Cl. 0,2 Art.-no.	5A Cl. 0,2s Art.-no.
1500	5	6153-10029	6153-10526	6153-10619	6153-10909	6153-10404
	10	6153-10030	6153-10527	6153-10620	6153-10910	6153-10405
	15	6153-10031	6153-10528	6153-10621		
1600	5	6153-10033	6153-10530	6153-10623	6153-10912	6153-10406
	10	6153-10034	6153-10531	6153-10624	6153-10913	6153-10407
	15	6153-10035	6153-10532	6153-10625	6153-10914	6153-10408

		Secondary current [A] / Class				
Primary current [A]	Burden [VA]	1A Cl. 1 Art.-no.	1A Cl. 0,5 Art.-no.	1A Cl. 0,5s Art.-no.	1A Cl. 0,2 Art.-no.	1A Cl. 0,2s Art.-no.
200	2.5	6153-10200				
250	1					
	2.5	6153-10201	6153-10700			
300	1		6153-10701			
	2.5	6153-10202	6153-10702			
	3.75	6153-10203				
400	1		6153-10703			
	1.25	6153-10220	6153-10719	6153-10800		
	1.5	6153-10221	6153-10720	6153-10813		
	2.5	6153-10204	6153-10704			
	5	6153-10205				
500	2.5	6153-10206	6153-10705	6153-10801		
	3.75		6153-10706			
	5	6153-10207				
600	2.5	6153-10208	6153-10707	6153-10802		
	5	6153-10209	6153-10708	6153-10803		
750	2.5	6153-10210	6153-10709	6153-10804	6153-10300	
	5	6153-10211	6153-10710	6153-10805		
	7.5	6153-10212				
800	2.5	6153-10213	6153-10712	6153-10806	6153-10301	
	3.75	6153-10222	6153-10721	6153-10814	6153-10306	
	5	6153-10214	6153-10713	6153-10807		
1000	2.5	6153-10215	6153-10714	6153-10808	6153-10302	6153-10101
	3.75	6153-10223	6153-10722	6153-10815	6153-10307	
	5	6153-10216	6153-10715	6153-10809	6153-10303	
1250	2.5	6153-10217	6153-10716	6153-10810	6153-10304	6153-10100
	3.75	6153-10224	6153-10723	6153-10816	6153-10308	
	5	6153-10218	6153-10717	6153-10811	6153-10305	
	7.5	6153-10219	6153-10718	6153-10812		

Included: Slider for fixing to the Busbar.

ASK 61.6

Plug-in current transformer

Busbar 1	60 x 10 mm
Busbar 2	50 x 30 mm
Round conductor	40 mm
Transformer width	95 mm
Height	116 mm
Depth	74 mm

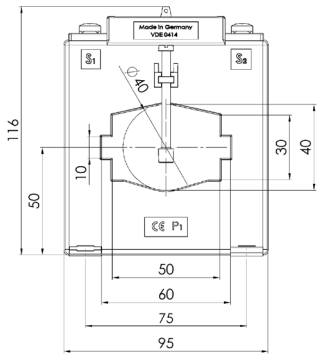

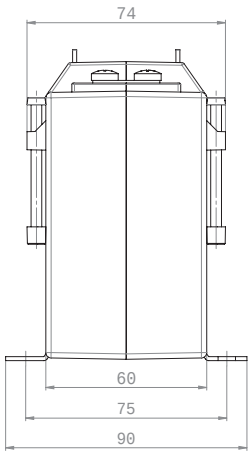

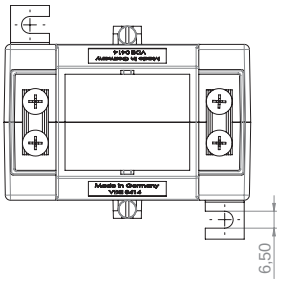

		Secondary current [A] / Class			
Primary current [A]	Burden [VA]	5 A Cl. 1 Art.-no.	5 A Cl. 0,5 Art.-no.	1 A Cl. 1 Art.-no.	1 A Cl. 0,5 Art.-no.
100	1,5	20063	20011	20263	20211
150	1,5	20065	20012	20265	20212
	2,5	20066	20013	20266	20213
200	2,5	20067	20014	20267	20214
	5	20068	20015	20268	20215
	10	20069		20269	
250	2,5	20116	20016	20321	20216
	5	20070	20017	20270	20217
	10	20071		20271	
	15	20072		20272	
300	2,5	20117	20019	20322	20219
	5	20073	20020	20273	20220
	10	20074	20021	20274	20221
	15	20075		20275	
400	2,5	20118	20023	20323	20223
	5	20076	20024	20276	20224
	10	20077	20025	20277	20225
	15	20078	20026	20278	20226
	30	20079		20279	
500	2,5	20119	20027	20324	20227
	5	20080	20028	20280	20228
	10	20081	20029	20281	20229
	15	20082	20030	20282	20230
	30	20083		20283	
600	2,5	20120	20031	20325	20231
	5	20084	20032	20284	20232
	10	20085	20033	20285	20233
	15	20086	20034	20286	20234
	30	20087		20287	
750	2,5	20121	20035	20326	20235
	5	20088	20036	20288	20236
	10	20089	20037	20289	20237
	15	20090	20038	20290	20238
	30	20091		20291	
800	5	20092	20040	20292	20240
	10	20093	20041	20293	20241
	15	20094	20042	20294	20242
	30	20095		20295	
1000	5	20122	20043	20327	20243
	10	20096	20044	20296	20244
	15	20097	20045	20297	20245
	30	20098	20046	20298	20246
	45	20099		20299	
1200	5	20123	20047	20328	20247
	10	20100	20048	20300	20248
	15	20101	20049	20301	20249
	30	20102	20050	20302	20250
	45	20103		20303	

		Secondary current [A] / Class			
Primary current [A]	Burden [VA]	5 A Cl. 1 Art.-no.	5 A Cl. 0,5 Art.-no.	1 A Cl. 1 Art.-no.	1 A Cl. 0,5 Art.-no.
1250	5	20124	20051	20329	20251
	10	20104	20052	20304	20252
	15	20105	20053	20305	20253
	30	20106	20054	20306	20254
	45	20107		20307	
1500	5	20125	20055	20330	20255
	10	20108	20056	20308	20256
	15	20109	20057	20309	20257
	30	20110	20058	20310	20258
	45	20111		20311	

		Art.-no.
	Snap-on mounting	**–**
	Sealed shutter, type E	**59044**

ASK 63.4

Plug-in current transformer

Busbar 1	60 x 30 mm
Busbar 2	50 x 40 mm
Round conductor	44 mm
Transformer width	96 mm
Height	105,5 mm
Depth	58 mm

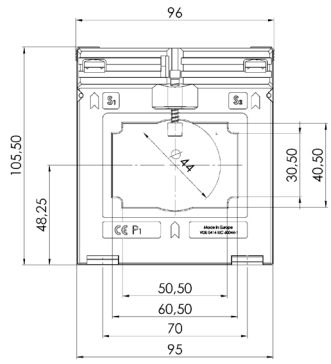

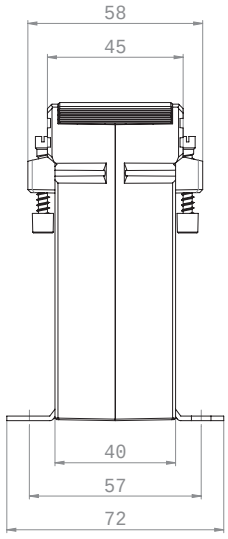

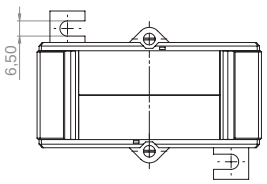

	Secondary current [A] / Class			
Primary current [A]	Burden [VA]	5 A Cl. 1 Art.-no.	5 A Cl. 0,5 Art.-no.	1 A Cl. 1 Art.-no.	1 A Cl. 0,5 Art.-no.
300	1,5	25041	25011	25241	25211
	2,5	25042	25012	25242	25212
400	2,5	25043	25013	25243	25213
	5	25044	25014	25244	25214
500	5	25045	25015	25245	25215
	10	25046		25246	
600	5	25047	25017	25247	25217
	10	25048	25018	25248	25218
	15	25049		25249	
750	5	25050	25020	25250	25220
	10	25051	25021	25251	25221
	15	25052	25022	25252	25222
800	5	25053	25023	25253	25223
	10	25054	25024	25254	25224
	15	25055	25025	25255	25225
1000	5	25056	25026	25256	25226
	10	25057	25027	25257	25227
	15	25058	25028	25258	25228
1200	5	25059	25029	25259	25229
	10	25060	25030	25260	25230
	15	25061	25031	25261	25231
1250	5	25062	25032	25262	25232
	10	25063	25033	25263	25233
	15	25064	25034	25264	25234
1500	5	25065	25035	25265	25235
	10	25066	25036	25266	25236
	15	25067	25037	25267	25237
1600	5	25068VG	25038VG	25268VG	25238VG
	10	25069VG	25039VG	25269VG	25239VG
	15	25070VG	25040VG	25270VG	25240VG

		Art.-no.
	Snap-on mounting	–
	Sealed shutter, type C	**59042**

ASK 63.6

Plug-in current transformer

Busbar 1	60 x 30 mm
Round conductor	30 mm
Transformer width	88 mm
Height	129 mm
Depth	78 mm

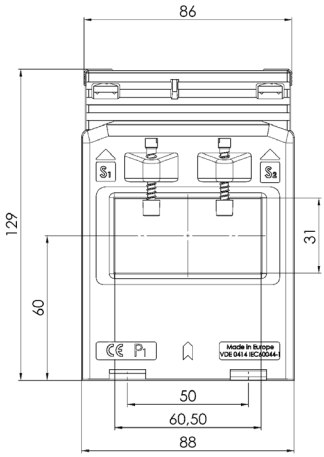

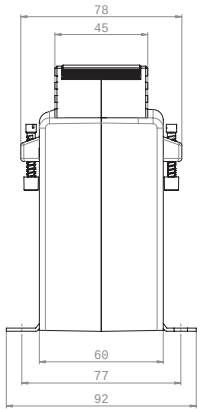

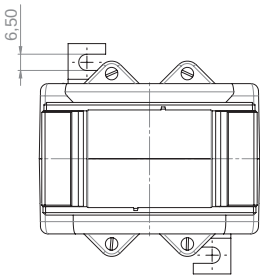

	Secondary current [A] / Class			
Primary current [A]	Burden [VA]	5 A Cl. 1 Art.-no.	5 A Cl. 0,5 Art.-no.	1 A Cl. 1 Art.-no.	1 A Cl. 0,5 Art.-no.
200	1,5	85060		85260	
	2,5	85061		85261	
250	1,5	85062	85011	85262	85211
	2,5	85063	85012	85263	85212
	5	85116		85316	
300	1,5	85064	85013	85264	85213
	2,5	85065	85014	85265	85214
	5	85066	85015	85266	85215
	10	85067		85267	
400	2,5	85068	85017	85268	85217
	5	85069	85018	85269	85218
	10	85071			
500	2,5	85073	85021	85273	85221
	5	85074	85022	85274	85222
	10	85075		85275	
	15	85076		85276	
600	2,5	85077	85025	85277	85225
	5	85078	85026	85278	85226
	10	85079	85027	85279	85227
	15	85080		85280	
750	2,5	85081	85029	85281	85229
	5	85082	85030	85282	85230
	10	85083	85031	85283	85231
	15	85084		85284	
800	2,5	85085	85033	85285	85233
	5	85086	85034	85286	85234
	10	85087	85035	85287	85235
	15	85088	85036	85288	85236
1000	5	85089	85037	85289	85237
	10	85090	85038	85290	85238
	15	85091	85039	85291	85239
	30	85092		85292	
1200	5	85093	85041	85293	85241
	10	85094	85042	85294	85242
	15	85095	85043	85295	85243
	30	85096		85296	
1250	5	85097	85045	85297	85245
	10	85098	85046	85298	85246
	15	85099	85047	85299	85247
	30	85100		85300	
1500	5	85101	85049	85301	85249
	10	85102	85050	85302	85250
	15	85103	85051	85303	85251
	30	85104		85304	
1600	5	85105	85053	85305	85253
	10	85106	85054	85306	85254
	15	85107	85055	85307	85255
	30	85108		85308	
2000	5	85109VV	85056VV	85309VV	85256VV
	10	85110VV	85057VV	85310VV	85257VV
	15	85111VV	85058VV	85311VV	85258VV

		Art.-no.
	Snap-on mounting	**–**
	Sealed shutter, type C	**59042**

ASK 81.4

Plug-in current transformer

Busbar 1	80 x 10 mm
Busbar 2	60 x 30 mm
Busbar 3	2 x 60 x 10 mm
Round conductor	55 mm
Transformer width	120 mm
Height	123,5 mm
Depth	58 mm

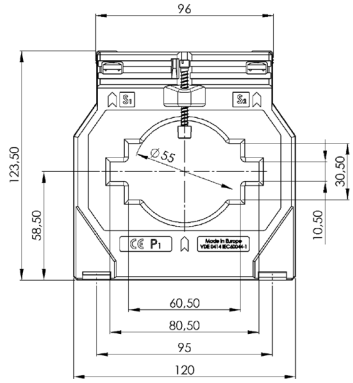

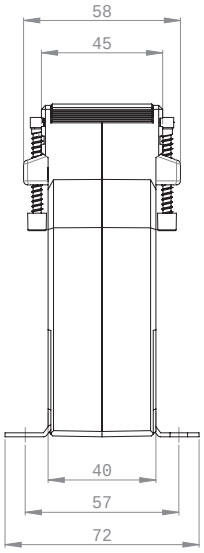

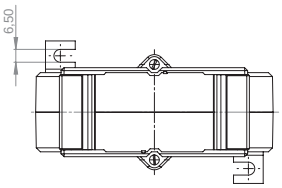

	Secondary current [A] / Class				
Primary current [A]	Burden [VA]	5 A Cl. 1 Art.-no.	5 A Cl. 0,5 Art.-no.	5 A Cl. 0,2s Art.-no.	1 A Cl. 1 Art.-no.	1 A Cl. 0,5 Art.-no.
400	2,5	21038	21009	V47-2004D	21238	21209
	5	21039	21010	V47-2004F	21239	21210
	10	21198			21292	
500	2,5	21040	21011	V47-2104D	21240	21211
	5	21041	21135	V47-2104F	21241	21335
	10	21042	21078		21242	21278
600	2,5	21043	21012	V47-2204D	21243	21212
	5	21044	21013	V47-2204F	21244	21213
	10	21045	21014	V47-2204H	21245	21214
750	2,5	21046	21015	V47-2304D	21246	21215
	5	21047	21016	V47-2304F	21247	21216
	10	21048	21017	V47-2304H	21248	21217
	15	21049	21079		21249	21279
800	2,5	21050	21018		21250	21218
	5	21051	21019		21251	21219
	10	21052	21020		21252	21220
	15	21053	21080		21253	21280
1000	2,5	21084				
	5	21054	21021	V47-2504F	21254	21221
	10	21055	21022	V47-2504H	21255	21222
	15	21056	21023	V47-2504J	21256	21223
	30	21057			21257	
1200	5	21058	21024	V47-2604F	21258	21224
	10	21059	21025	V47-2604H	21259	21225
	15	21060	21026	V47-2604J	21260	21226
1250	5	21062	21027	V47-2704F	21262	21227
	10	21063	21028	V47-2704H	21263	21228
	15	21064	21029	V47-2704J	21264	21229
1500	5	21085	21030	V47-2804F	21285	21230
	10	21066	21031	V47-2804H	21266	21231
	15	21067	21032	V47-2804J	21267	21232
	30	21068			21268	
1600	5	21086	21033		21286	21233
	10	21070	21034		21270	21234
	15	21071	21035		21271	21235
	30	21072			21272	
2000	10	21074	21036		21274	21236
	15	21075	21037		21275	21237
	30	21076			21276	

		Art.-no.
	Snap-on mounting	**–**
	Sealed shutter, type C	**59042**

Busbar 1	80 x 10 mm
Busbar 2	60 x 30 mm
Busbar 3	2 x 60 x 10 mm
Round conductor	55 mm
Transformer width	120 mm
Height	123,5 mm
Depth	58 mm

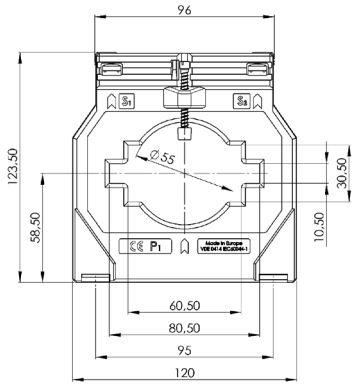

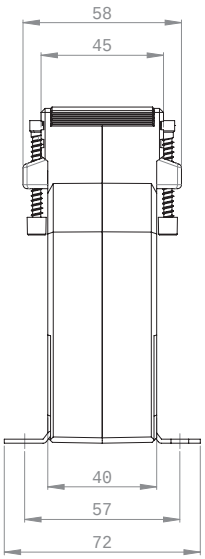

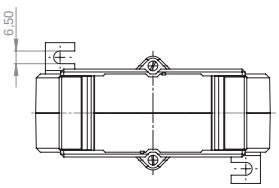

ASK 81.4 2U

Plug-in current transformer, secondary reconnectable

		Secondary current [A] / Class	
Primary current [A]	Burden [VA]	5 A Cl. 1 Art.-no.	1 A Cl. 1 Art.-no.
1000-500	10-5	21120	21320
	15-7,5	21121	21321
1200-600	10-5	21122	21322
	15-7,5	21123	21323
1500-750	10-5	21124	21324
	15-7,5	21125	21325
	30-15	21126	21326
1600-800	10-5	21127	21327
	15-7,5	21128	21328

ASK 81.4 3U

Plug-in current transformer, secondary reconnectable

		Secondary current [A] / Class	
Primary current [A]	Burden [VA]	5 A Cl. 1 Art.-no.	1 A Cl. 1 Art.-no.
1000-750-500	10-5-2,5	21166	21366
1200-800-600	15-10-5	21164	21364
1500-1000-500	15-10-5	21163	21363
1500-1000-750	15-10-5	21165	21365
1600-800-400	15-10-5	21162	21362

		Art.-no.
	Snap-on mounting	**–**
	Sealed shutter, type C	**59042**

ASK 83.3

Plug-in current transformer

Busbar 1: 3 x 80 x 10 mm
Busbar 2: 3 x 60 x 10 mm
Busbar 3: 3 x 50 x 10 mm
Round conductor: 70 mm
Transformer width: 106 mm
Height: 132,60 mm
Depth: 30 mm

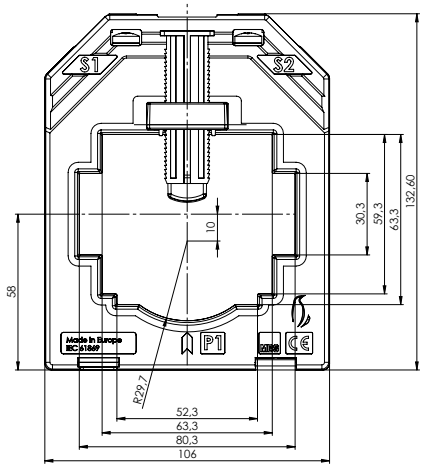

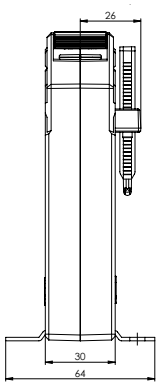

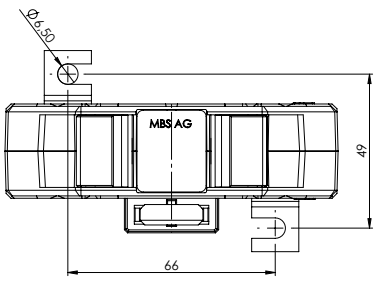

		Secondary current [A] / Class				
Primary current [A]	Burden [VA]	5A Cl. 1 Art.-no.	5A Cl. 0,5 Art.-no.	5A Cl. 0,5s Art.-no.	5A Cl. 0,2 Art.-no.	5A Cl. 0,2s Art.-no.
400	2.5	833-10000	833-10500			
	5	833-10001				
500	2.5	833-10002	833-10502	833-10600		
	5	833-10003	833-10503			
600	2.5	833-10004	833-10504	833-10601		
	5	833-10005	833-10505	833-10602		
	7.5	833-10006	833-10506			
750	2.5	833-10007	833-10507	833-10603		
	5	833-10008	833-10508	833-10604		
	7.5	833-10009	833-10509			
800	2.5	833-10010	833-10510	833-10605	833-10900	
	5	833-10011	833-10511	833-10606		
	7.5			833-10607		
	10	833-10012	833-10512			
1000	2.5	833-10013	833-10513	833-10608	833-10901	
	5	833-10014	833-10514	833-10609	833-10902	
	10	833-10015	833-10515	833-10610		
1250	2.5	833-10016	833-10516	833-10611	833-10903	
	5	833-10017	833-10517	833-10612	833-10904	
	10	833-10018	833-10518	833-10613		
1500	2.5	833-10019	833-10519	833-10614	833-10905	833-10400
	5	833-10020	833-10520	833-10615	833-10906	833-10401
	10	833-10021	833-10521	833-10616	833-10907	
1600	2.5	833-10022	833-10522	833-10617	833-10908	833-10402
	5	833-10023	833-10523	833-10618	833-10909	833-10403
	10	833-10024	833-10524	833-10619	833-10910	
2000	2.5	833-10025	833-10525	833-10620	833-10911	833-10404
	5	833-10026	833-10526	833-10621	833-10912	833-10405
	10	833-10027	833-10527	833-10622	833-10913	
2500	2.5	833-10028	833-10528	833-10623	833-10914	833-10406
	5	833-10029	833-10529	833-10624	833-10915	833-10407
	10	833-10030	833-10530	833-10625	833-10916	833-10408
	15	833-10031	833-10531	833-10626	833-10917	

Included: Slider for fixing to the Busbar.

ASK 83.3

Plug-in current transformer

Busbar 1: 3 x 80 x 10 mm
Busbar 2: 3 x 60 x 10 mm
Busbar 3: 3 x 50 x 10 mm
Round conductor: 70 mm
Transformer width: 106 mm
Height: 132,60 mm
Depth: 30 mm

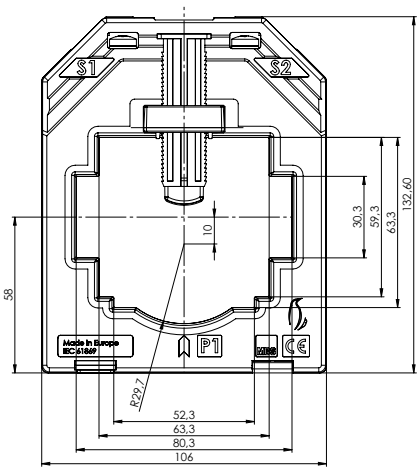

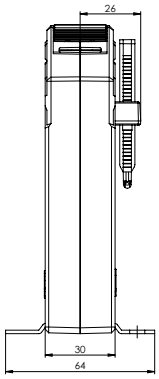

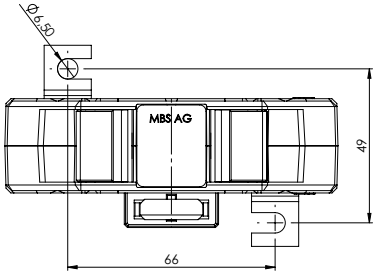

		Secondary current [A] / Class				
Primary current [A]	Burden [VA]	1A Cl. 1 Art.-no	1A Cl. 0,5 Art.-no	1A Cl. 0,5s Art.-no	1A Cl. 0,2 Art.-no	1A Cl. 0,2s Art.-no
500	2.5	833-10200	833-10700			
	5	833-10201				
600	2.5	833-10202	833-10701	833-10800		
	5	833-10203	833-10702			
750	2.5	833-10204	833-10703	833-10801		
	5	833-10205	833-10704	833-10802		
	7.5	833-10206	833-10705			
800	2.5	833-10207	833-10706	833-10803	833-10300	
	5	833-10208	833-10707	833-10804		
	7.5	833-10209	833-10708			
1000	2.5	833-10210	833-10709	833-10805	833-10301	
	5	833-10211	833-10710	833-10806		
	10	833-10212	833-10711			
1250	2.5	833-10213	833-10712	833-10807	833-10302	
	5	833-10214	833-10713	833-10808	833-10303	
	10	833-10215	833-10714	833-10809		
1500	2.5	833-10216	833-10715	833-10810	833-10304	833-10100
	5	833-10217	833-10716	833-10811	833-10305	
	10	833-10218	833-10717	833-10812	833-10306	
1600	2.5	833-10219	833-10718	833-10813	833-10307	833-10101
	5	833-10220	833-10719	833-10814	833-10308	
	10	833-10221	833-10720	833-10815	833-10309	

Included: Slider for fixing to the Busbar.

ASK 83.4

Plug-in current transformer

Selectable positions of the secondary terminals allow flexible positions of installation.

Busbar 1	84 x 34 mm
Round conductor	34 mm
Transformer width	96 mm
Height	117 mm
Depth	68 mm

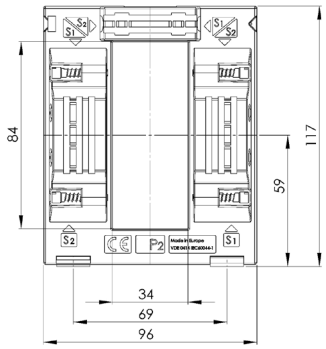

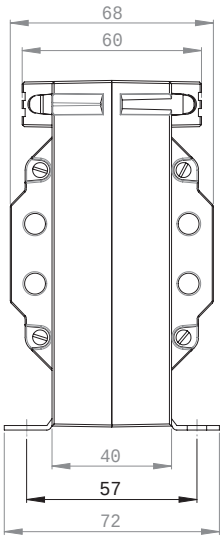

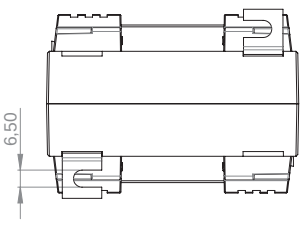

	Secondary current [A] / Class			
Primary current [A]	Burden [VA]	5 A Cl. 1 Art.-no.	5 A Cl. 0,5 Art.-no.	1 A Cl. 1 Art.-no.	1 A Cl. 0,5 Art.-no.
300	1,5	100051-x	100011-x	100251-x	100211-x
	2,5	100052-x	100012-x	100252-x	100212-x
400	2,5	100053-x	100013-x	100253-x	100213-x
	5	100054-x	100014-x	100254-x	100214-x
500	2,5	100055-x	100015-x	100255-x	100215-x
	5	100056-x	100016-x	100256-x	100216-x
600	2,5	100057-x	100017-x	100257-x	100217-x
	5	100058-x	100018-x	100258-x	100218-x
	10	100059-x		100259-x	
750	2,5	100060-x	100019-x	100260-x	100219-x
	5	100061-x	100020-x	100261-x	100220-x
	10	100062-x	100021-x	100262-x	100221-x
	15	100063-x		100263-x	
800	2,5	100064-x	100022-x	100264-x	100222-x
	5	100065-x	100023-x	100265-x	100223-x
	10	100066-x	100024-x	100266-x	100224-x
	15	100067-x		100267-x	
1000	5	100068-x	100025-x	100268-x	100225-x
	10	100069-x	100026-x	100269-x	100226-x
	15	100070-x	100027-x	100270-x	100227-x
1200	5	100071-x	100028-x	100271-x	100228-x
	10	100072-x	100029-x	100272-x	100229-x
	15	100073-x	100030-x	100273-x	100230-x
1250	5	100074-x	100031-x	100274-x	100231-x
	10	100075-x	100032-x	100275-x	100232-x
	15	100076-x	100033-x	100276-x	100233-x
1500	5	100077-x	100034-x	100277-x	100234-x
	10	100078-x	100035-x	100278-x	100235-x
	15	100079-x	100036-x	100279-x	100236-x
1600	5	100080-x	100037-x	100280-x	100237-x
	10	100081-x	100038-x	100281-x	100238-x
	15	100082-x	100039-x	100282-x	100239-x
	30	100083-x		100283-x	
1800	10	100084-x	100040-x	100284-x	100240-x
	15	100085-x	100041-x	100285-x	100241-x
	30	100086-x		100286-x	
2000	10	100087-x	100042-x	100287-x	100242-x
	15	100088-x	100043-x	100288-x	100243-x
	30	100089-x		100289-x	

		Art.-no.
	Snap-on mounting	–
	Sealed shutter	–

ASK 83.4

Plug-in current transformer

The secondary terminals of the current transformer type ASK 83.4 can be realized in 6 different positions. Please be so kind and choose with your order.

Connection

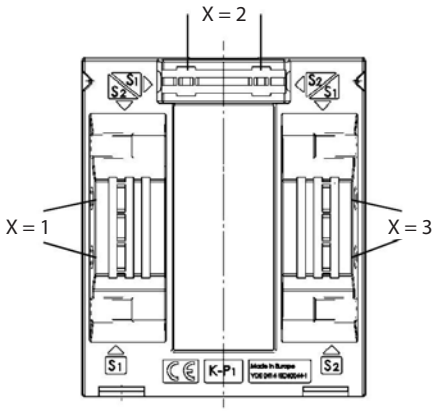

Connection

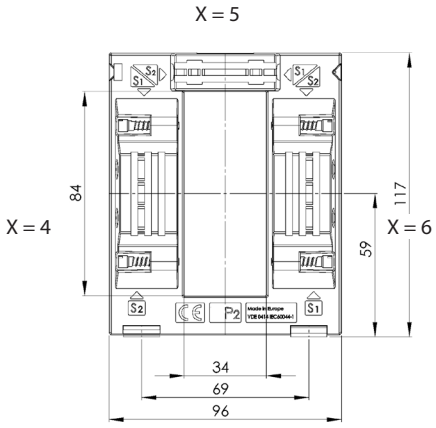

Order example

ASK 83.4 800/5A 10VA Cl.1
Connection option K-P_1 (h.b.) top
Art.-no. 100066-2

ASK 101.4

Plug-in current transformer

Busbar 1	100 x 10 mm
Busbar 2	2 x 80 x 10 mm
Round conductor	70 mm
Transformer width	130 mm
Height	141 mm
Depth	58 mm

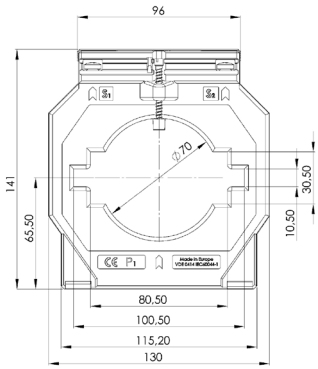

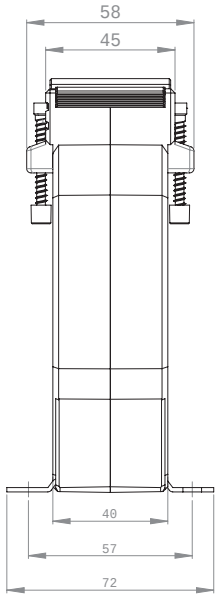

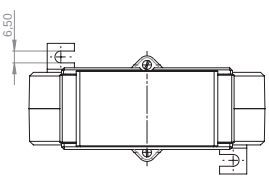

	Secondary current [A] / Class			
Primary current [A]	Burden [VA]	5 A Cl. 1 Art.-no.	5 A Cl. 0,5 Art.-no.	1 A Cl. 1 Art.-no.	1 A Cl. 0,5 Art.-no.
500	2,5		22009		22209
	5	22076	22010	22276	22210
	10	22077		22277	
600	2,5		22011		22211
	5	22038	22012	22238	22212
	10	22039		22239	
750	2,5		22013		22213
	5	22040	22014	22240	22214
	10	22041	22078	22241	22281
800	5	22042	22015	22242	22215
	10	22043	22016	22243	22216
	15	22044		22244	
1000	5	22045	22017	22245	22217
	10	22046	22018	22246	22218
	15	22047		22247	
1200	5	22048	22019	22248	22219
	10	22049	22020	22249	22220
	15	22050		22250	
	30	22051		22251	
1250	5	22052	22021	22252	22221
	10	22053	22022	22253	22222
	15	22054		22254	
	30	22055		22255	
1500	5	22056	22023	22256	22223
	10	22057	22024	22257	22224
	15	22058	22025	22258	22279
	30	22059		22259	
1600	5		22026		22226
	10	22060	22027	22260	22227
	15	22061	22028	22261	22228
	30	22062		22262	
1800	5		22029		22229
	10	22064	22030	22264	22230
	15	22065	22031	22265	22231
	30	22066		22266	
2000	5		22032		22232
	10	22068	22033	22268	22233
	15	22069	22034	22269	22234
	30	22070	22118	22270	22280

		Art.-no.
	Snap-on mounting	**–**
	Sealed shutter, type C	**59042**

ASK 101.4 2U

Plug-in current transformer, secondary reconnectable

Busbar 1	100 x 10 mm
Busbar 2	2 x 80 x 10 mm
Round conductor	70 mm
Transformer width	130 mm
Height	141 mm
Depth	58 mm

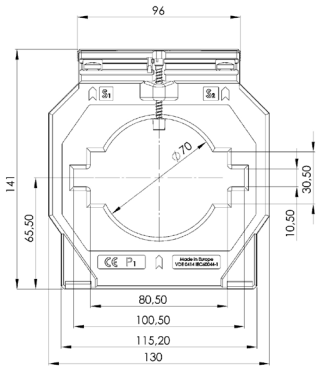

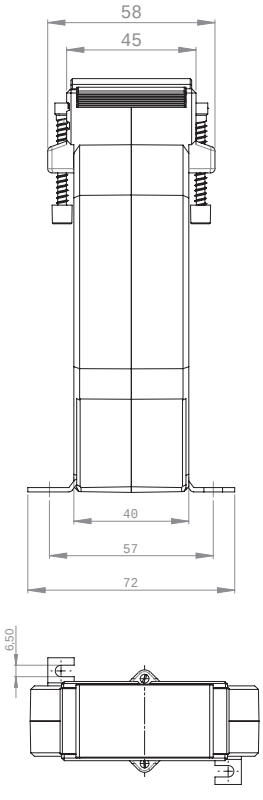

	Secondary current [A] / Class	
Primary current [A] / Burden [VA]	5 A Cl. 1 Art.-no.	1 A Cl. 1 Art.-no.
1200-600 / 10-5	22120	22320
1200-600 / 15-7,5	22121	22321
1500-750 / 10-5	22122	22322
1500-750 / 15-7,5	22123	22323
1600-800 / 10-5	22124	22324
1600-800 / 15-7,5	22125	22325
1600-800 / 30-15	22126	22326
2000-1000 / 10-5	22127	22327
2000-1000 / 15-7,5	22128	22328
2000-1000 / 30-15	22129	22329

		Art.-no.
	Snap-on mounting	**–**
	Sealed shutter, type C	**59042**

ASK 103.3

Plug-in current transformer

Busbar 1	2 x 100 x 10 mm
Busbar 2	3 x 80 x 10 mm
Round conductor	85 mm
Transformer width	172 mm
Height	184,8 mm
Depth	52 mm

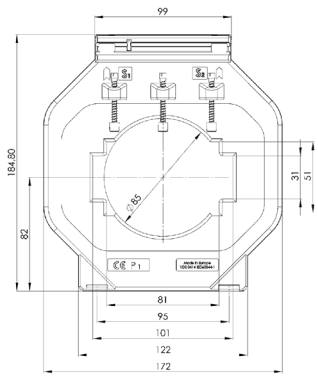

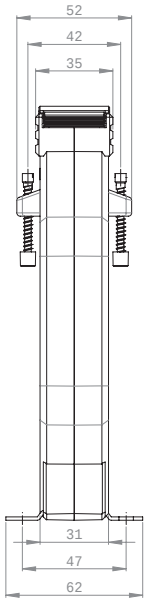

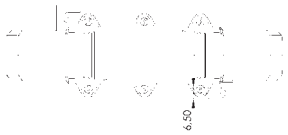

	Secondary current [A] / Class			
Primary current [A]	Burden [VA]	5 A Cl. 1 Art.-no.	5 A Cl. 0,5 Art.-no.	1 A Cl. 1 Art.-no.	1 A Cl. 0,5 Art.-no.
750	2,5		23011		23211
	5	23036	23076	23236	23276
	10	23037		23237	
800	2,5		23012		23212
	5	23038	23013	23238	23213
	10	23039	23077	23239	23277
	15	23040		23240	
1000	5	23041	23014	23241	23214
	10	23042	23015	23242	23215
	15	23043	23016	23243	23216
1200	5	23044	23017	23244	23217
	10	23045	23018	23245	23218
	15	23046	23019	23246	23219
	30	23047		23247	
1250	5	23048	23020	23248	23220
	10	23049	23021	23249	23221
	15	23050	23022	23250	23222
	30	23051		23251	
1500	10	23052	23023	23252	23223
	15	23053	23024	23253	23224
	30	23054		23254	
1600	10	23056	23025	23256	23225
	15	23057	23026	23257	23226
	30	23058		23258	
2000	10	23060	23027	23260	23227
	15	23061	23028	23261	23228
	30	23062	23029	23262	23229
2500	10	23064	23030	23264	23230
	15	23065	23031	23265	23231
	30	23066	23032	23266	23232
3000	10	23068	23033	23268	23233
	15	23069	23034	23269	23234
	30	23070	23035	23270	23235

		Art.-no.
	Snap-on mounting	**–**
	Sealed shutter, type A	**59040**

ASK 103.41

Plug-in current transformer

Busbar 1	103 x 41 mm
Round conductor	40 mm
Transformer width	99 mm
Height	150 mm
Depth	58 mm

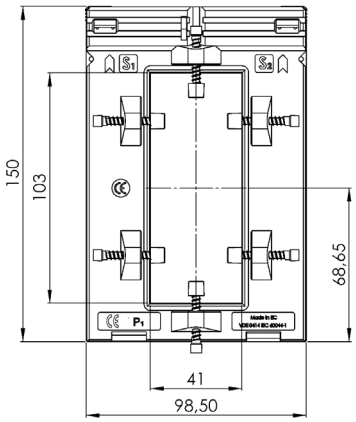

		Secondary current [A] / Class			
Primary current [A]	Burden [VA]	5 A Cl. 1 Art.-no.	5 A Cl. 0,5 Art.-no.	1 A Cl. 1 Art.-no.	1 A Cl. 0,5 Art.-no.
400	2,5	97051	97021	97251	97221
	5	97052		97252	
500	2,5	97053	97023	97253	97223
	5	97054		97254	
600	2,5	97055	97025	97255	97225
	5	97056		97256	
750	2,5	97057	97027	97257	97227
	5	97058		97258	
800	5	97059	97029	97259	97229
	10	97060		97260	
1000	10	97061	97031	97261	97231
	15	97062		97262	
1200	10	97063	97033	97263	97233
	15	97064		97264	
1250	10	97065	97035	97265	97235
	15	97066		97266	
1500	15	97067	97037	97267	97237
	30	97068		97268	
2000	15	97069	97039	97269	97239
	30	97070		97270	

ASK 103.41 2U

Plug-in current transformer, secondary reconnectable

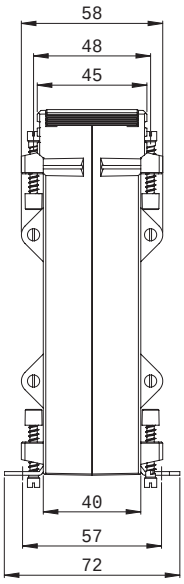

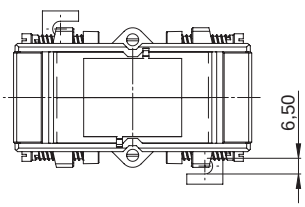

	Secondary current [A] / Class			
Primary current [A]	Burden [VA]	5 A Cl. 1 Art.-no.	5 A Cl. 0,5 Art.-no.	1 A Cl. 1 Art.-no.	1 A Cl. 0,5 Art.-no.
1000-500	5-2,5	97081	97071	97281	97271
1200-600	5-2,5	97082	97072	97282	97272
1500-750	10-5	97083	97073	97283	97273
	15-7,5	97084		97284	
2000-1000	15-7,5	97085	97075	97285	97275
	30-15	97086		97286	

		Art.-no.
	Snap-on mounting	–
	Sealed shutter	–

ASK 105.3

Plug-in current transformer

Busbar: 100 x 56 mm
Transformer width: 129 mm
Height: 156 mm
Depth: 30 mm

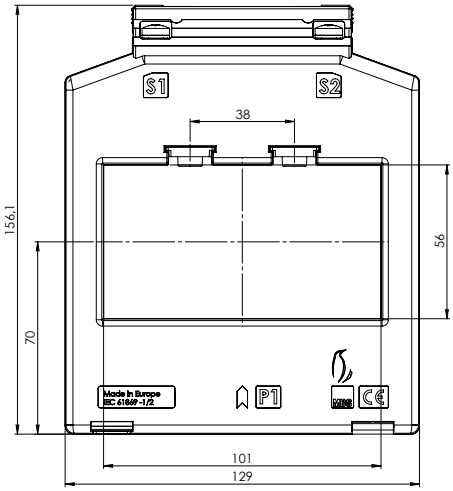

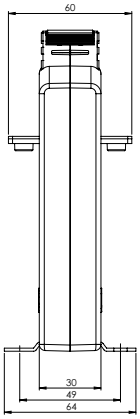

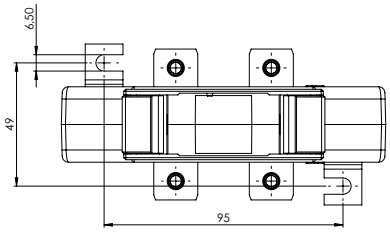

		Secondary current [A] / Class				
Primary current [A]	Burden [VA]	5A Cl. 1 Art.-no.	5A Cl. 0,5 Art.-no.	5A Cl. 0,5s Art.-no.	5A Cl. 0,2 Art.-no.	5A Cl. 0,2s Art.-no.
400	2.5	1053-10000				
	3.75	1053-10001				
	5	1053-10002				
500	2.5	1053-10003	1053-10500			
	3.75	1053-10004	1053-10501			
	5	1053-10005	1053-10502			
600	2.5	1053-10006	1053-10503			
	3.75	1053-10007	1053-10504			
	5	1053-10008	1053-10505			
	7.5	1053-10009				
	10	1053-10010				
750	2.5	1053-10011	1053-10506	1053-10600		
	3.75	1053-10012	1053-10507			
	5	1053-10013	1053-10508			
	7.5	1053-10014				
	10	1053-10015				
800	2.5	1053-10016	1053-10509	1053-10601		
	5	1053-10017	1053-10510			
	7.5	1053-10018	1053-10511			
	10	1053-10019				
1000	2.5	1053-10020	1053-10512	1053-10602		
	5	1053-10021	1053-10513	1053-10603		
	7.5	1053-10022	1053-10514	1053-10604		
	10	1053-10023	1053-10515	1053-10605		
1250	2.5	1053-10024	1053-10516	1053-10606		
	5	1053-10025	1053-10517	1053-10607		
	10	1053-10026	1053-10518	1053-10608		
	15	1053-10027				
1500	2.5	1053-10028	1053-10520	1053-10609	1053-10905	
	5	1053-10029	1053-10521	1053-10610	1053-10906	
	10	1053-10030	1053-10522	1053-10611	1053-10907	
	15	1053-10031	1053-10523	1053-10612		
1600	2.5	1053-10032	1053-10524	1053-10613	1053-10908	
	5	1053-10033	1053-10525	1053-10614	1053-10909	
	10	1053-10034	1053-10526	1053-10615	1053-10910	
	15	1053-10035	1053-10527	1053-10616		
2000	2.5	1053-10036	1053-10528	1053-10617	1053-10911	1053-10400
	5	1053-10037	1053-10529	1053-10618	1053-10912	1053-10401
	7.5	1053-10038	1053-10530	1053-10619	1053-10913	
	10	1053-10039	1053-10531	1053-10620	1053-10914	
	15	1053-10040	1053-10532	1053-10621		

ASK 105.3

Busbar: 100 x 56 mm
Transformer width: 129 mm
Height: 156 mm
Depth: 30 mm

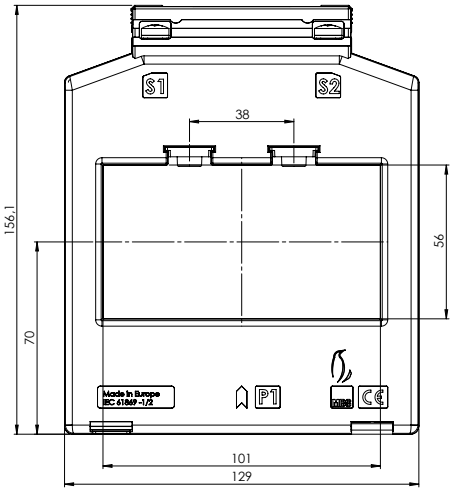

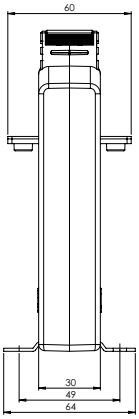

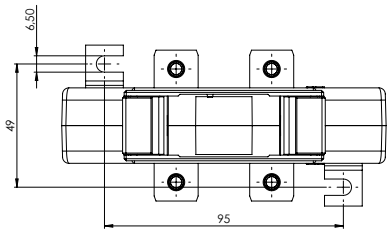

		Secondary current [A] / Class				
Primary current [A]	Burden [VA]	5A Cl. 1 Art.-no.	5A Cl. 0,5 Art.-no.	5A Cl. 0,5s Art.-no.	5A Cl. 0,2 Art.-no.	5A Cl. 0,2s Art.-no.
2500	2.5			1053-10622	1053-10916	1053-10402
	5	1053-10041	1053-10533	1053-10623	1053-10917	1053-10403
	7.5	1053-10042	1053-10534	1053-10624	1053-10918	1053-10404
	10	1053-10043	1053-10535	1053-10625	1053-10919	1053-10405
	15	1053-10044	1053-10536	1053-10626	1053-10920	
3000	5	1053-10045	1053-10537	1053-10627	1053-10921	1053-10406
	10	1053-10046	1053-10538	1053-10628	1053-10922	1053-10407
	15	1053-10047	1053-10539	1053-10629	1053-10923	1053-10408
4000	2.5	1053-10048				
	5	1053-10049	1053-10540	1053-10630	1053-10924	1053-10409
	10	1053-10050	1053-10541	1053-10631	1053-10925	1053-10410
	15	1053-10051	1053-10542	1053-10632	1053-10926	1053-10411

		Secondary current [A] / Class				
Primary current [A]	Burden [VA]	1A Cl. 1 Art.-no.	1A Cl. 0,5 Art.-no.	1A Cl. 0,5s Art.-no.	1A Cl. 0,2 Art.-no.	1A Cl. 0,2s Art.-no.
400	2.5	1053-10200				
	3.75	1053-10201				
	5	1053-10202				
500	2.5	1053-10203	1053-10700			
	3.75	1053-10204	1053-10701			
	5	1053-10205	1053-10702			
600	2.5	1053-10206	1053-10703			
	3.75	1053-10207	1053-10704			
	5	1053-10208	1053-10705			
	7.5	1053-10209				
	10	1053-10210				
750	2.5	1053-10211	1053-10706	1053-10800		
	3.75	1053-10212	1053-10707			
	5	1053-10213	1053-10708			
	7.5	1053-10214				
	10	1053-10215				
800	2.5	1053-10216	1053-10709	1053-10801		
	5	1053-10217	1053-10710			
	7.5	1053-10218				
	10	1053-10219				
1000	2.5	1053-10220	1053-10711	1053-10802	1053-10300	
	5	1053-10221	1053-10712	1053-10803	1053-10301	
	7.5	1053-10222	1053-10713	1053-10804		
	10	1053-10223	1053-10714	1053-10805		
1250	2.5	1053-10224	1053-10715	1053-10806	1053-10302	
	5	1053-10225	1053-10716	1053-10807	1053-10303	
	10	1053-10226	1053-10717	1053-10808		
	15	1053-10227	1053-10718			

ASK 105.3

Plug-in current transformer

Busbar: 100 x 56 mm
Transformer width: 129 mm
Height: 156 mm
Depth: 30 mm

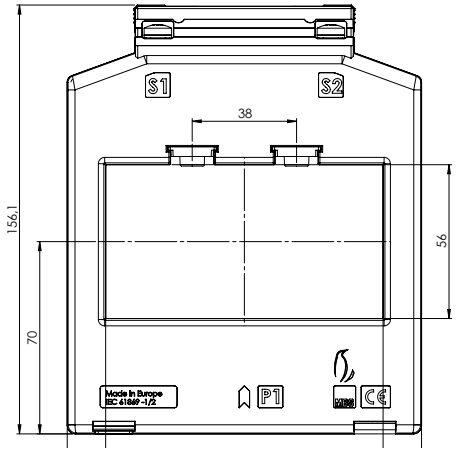

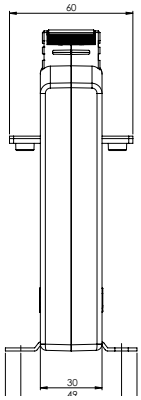

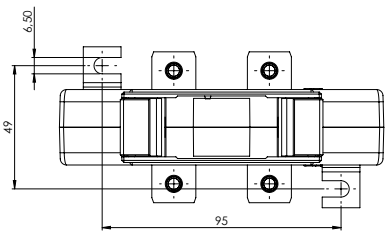

		Secondary current [A] / Class				
Primary current [A]	Burden [VA]	1A Cl. 1 Art.-no.	1A Cl. 0,5 Art.-no.	1A Cl. 0,5s Art.-no.	1A Cl. 0,2 Art.-no.	1A Cl. 0,2s Art.-no.
1500	2.5	1053-10228	1053-10719	1053-10809	1053-10304	
	5	1053-10229	1053-10720	1053-10810	1053-10305	
	10	1053-10230	1053-10721	1053-10811	1053-10306	
	15	1053-10231	1053-10722	1053-10812		
1600	2.5	1053-10232	1053-10723	1053-10813	1053-10307	
	5	1053-10233	1053-10724	1053-10814	1053-10308	
	10	1053-10234	1053-10725	1053-10815	1053-10309	
	15	1053-10235	1053-10726	1053-10816		
2000	2.5	1053-10236	1053-10727	1053-10817	1053-10310	1053-10100
	5	1053-10237	1053-10728	1053-10818	1053-10311	1053-10101
	7.5	1053-10238	1053-10729	1053-10819	1053-10312	
	10	1053-10239	1053-10730	1053-10820	1053-10313	
	15	1053-10240	1053-10731	1053-10821	1053-10314	
2500	2.5	1053-10241	1053-10732	1053-10822	1053-10315	1053-10102
	5	1053-10242	1053-10733	1053-10823	1053-10316	1053-10103
	7.5	1053-10243	1053-10734	1053-10824	1053-10317	1053-10104
	10	1053-10244	1053-10735	1053-10825	1053-10318	1053-10105
	15	1053-10245		1053-10826	1053-10319	
3000	5	1053-10246	1053-10736	1053-10827	1053-10320	1053-10106
	10	1053-10247	1053-10737	1053-10828	1053-10321	1053-10107
	15	1053-10248	1053-10738	1053-10829	1053-10322	

ASK 105.6

Plug-in current transformer

Busbar 1	100 x 55 mm
Round conductor	55 mm
Transformer width	129 mm
Height	167 mm
Depth	78 mm

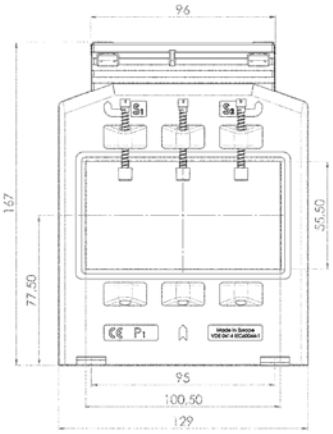

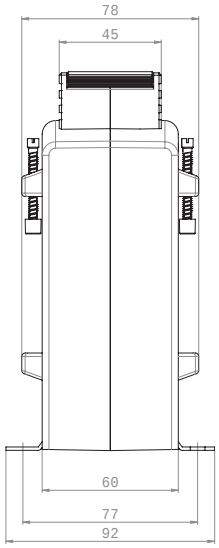

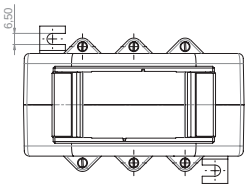

	Secondary current [A] / Class				
Primary current [A]	Burden [VA]	5 A Cl. 1 Art.-no.	5 A Cl. 0,5 Art.-no.	5 A Cl. 0,2s Art.-no.	1 A Cl. 1 Art.-no.	1 A Cl. 0,5 Art.-no.
600	2,5		86083	V55-2204D		86283
	5	86092	86084		86292	86284
	10	86093			86293	
750	2,5		86086	V55-2304D		86286
	5	86095	86087	V55-2304F	86295	86287
	10	86096	86157		86296	86357
800	5	86097	86089	V55-2404F	86297	86289
	10	86098	86090		86298	86290
1000	2,5		86158			
	5	86051	86011	V55-2504F	86251	86211
	10	86052	86159	V55-2504H	86252	86359
	15	86113	86160		86299	86360
1200	5	86053	86013	V55-2604F	86253	86213
	10	86054	86014	V55-2604H	86254	86214
	15	86055	86015		86255	86215
1250	5	86056	86016	V55-2704F	86256	86216
	10	86057	86017	V55-2704H	86257	86217
	15	86058	86018	V55-2704J	86258	86218
1500	5	86059	86019	V55-2804F	86259	86219
	10	86060	86020	V55-2804H	86260	86220
	15	86061	86021	V55-2804J	86261	86221
	30	86062	86163		86262	86363
1600	5	86110	86164	V55-2904F		
	10	86142	86165	V55-2904H	86331	86338
	15	86101	86149	V55-2904J	86330	86339
	30	86138	86166		86337	86340
1800	5	86063	86023		86263	86223
	10	86064	86024		86264	86224
	15	86065	86025		86265	86225
	30	86066			86266	
2000	5		86167	V55-3004F		
	10	86067	86027	V55-3004H	86267	86227
	15	86068	86028	V55-3004J	86268	86228
	30	86069	86029		86269	86229
2400	10		86169	V55-3104H		
	15		86170	V55-3104J		
	30		86171			
2500	5		86172	V55-3204F		
	10	86071	86031	V55-3204H	86271	86231
	15	86072	86032	V55-3204J	86272	86232
	30	86073	86033		86273	86233
3000	5		86173			
	10	86075	86035		86275	86235
	15	86076	86036		86276	86236

		Art.-no.
	Snap-on mounting	**–**
	Sealed shutter, type C	**59042**

ASK 105.6N

Plug-in current transformer

Busbar 1	100 x 55 mm
Round conductor	55 mm
Transformer width	129 mm
Height	214 mm
Depth	78 mm

	Secondary current [A] / Class			
Primary current [A]	Burden [VA]	5 A Cl. 1 Art.-no.	5 A Cl. 0,5 Art.-no.	1 A Cl. 1 Art.-no.	1 A Cl. 0,5 Art.-no.
2500	10	86451	86481	86411	86431
	15	86452	86482	86412	86432
3000	10	86455	86484	86415	86434
	15	86456	86485	86416	86435
4000	10	86459	86487	86419	86437
	15	86460	86488	86420	86438

		Art.-no.
	Snap-on mounting	**–**
	Sealed shutter, type C	**59042**

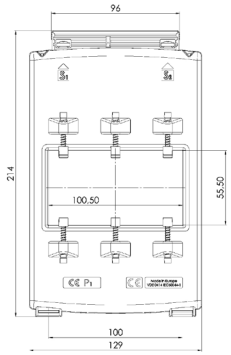

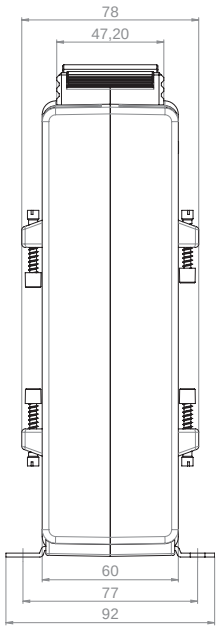

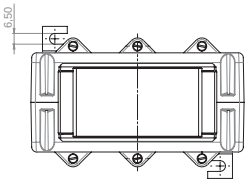

ASK 123.3

Plug-in current transformer

Busbar 1	123 x 30 mm
Busbar 2	3 x 100 x 10 mm
Round conductor	100 mm
Transformer width	172 mm
Height	184,8 mm
Depth	52 mm

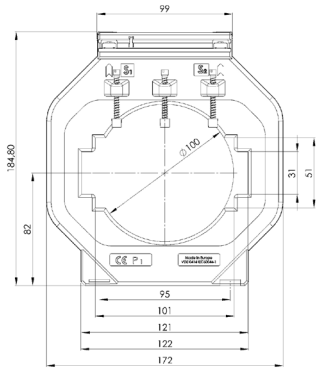

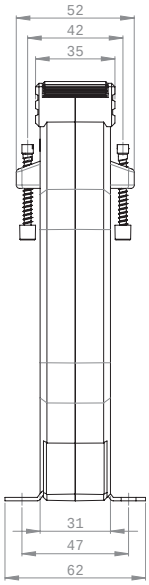

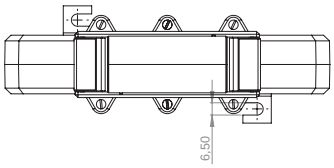

	Secondary current [A] / Class				
Primary current [A]	Burden [VA]	5 A Cl. 1 Art.-no.	5 A Cl. 0,5 Art.-no.	5 A Cl. 0,2s Art.-no.	1 A Cl. 1 Art.-no.	1 A Cl. 0,5 Art.-no.
750	2,5		24127			
	5		24128			
	10		24129			
1000	2,5		24010	V56-2504D		
	5	24037	24011	V56-2504F	24237	24211
	10	24038	24126		24238	24125
1200	5	24039	24012	V56-2604F	24239	24212
	10	24040	24013		24240	24213
	15	24041	24014		24241	24214
1250	5	24042	24015	V56-2704F	24242	24215
	10	24043	24016	V56-2704H	24243	24216
	15	24044	24017		24244	24217
1500	5	24045	24018	V56-2804F	24245	24218
	10	24046	24019	V56-2804H	24246	24219
	15	24047	24020		24247	24220
	30	24048			24248	
1600	5	24112		V56-2904F		
	10	24107		V56-2904H		
	15	24113		V56-2904J		
	30	24108	24131			
1800	5	24049	24021		24249	24221
	10	24050	24022		24250	24222
	15	24051	24023		24251	24223
	30	24052			24252	
2000	5		24024	V56-3004F		24224
	10	24053	24025	V56-3004H	24253	24225
	15	24054	24026	V56-3004J	24254	24226
	30	24055	24027		24255	24227
2500	5		24136	V56-3204F		
	10	24057	24028	V56-3204H	24257	24228
	15	24058	24029	V56-3204J	24258	24229
	30	24059	24030		24259	24230
3000	5		24137	V56-3304F		
	10	24061	24031	V56-3304H	24261	24231
	15	24062	24032	V56-3304J	24262	24232
	30	24063	24033		24263	24233
	45	24064			24264	

		Art.-no.
	Snap-on mounting	**–**
	Sealed shutter, type A	**59040**

ASK 127.3

Plug-in current transformer

Busbar: 122 x 71 mm
Transformer width: 159 mm
Height: 188 mm
Depth: 30 mm

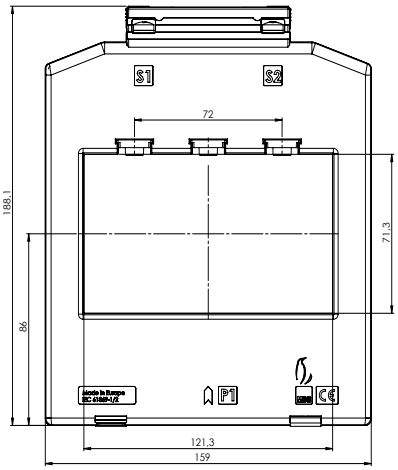

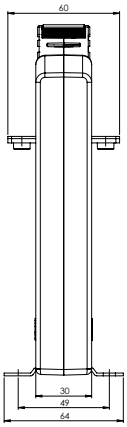

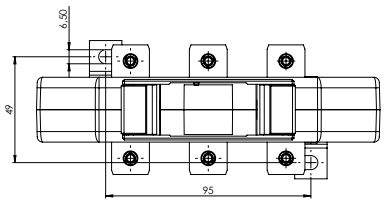

		Secondary current [A] / Class				
Primary current [A]	Burden [VA]	5A Cl. 1 Art.-no.	5A Cl. 0,5 Art.-no.	5A Cl. 0,5s Art.-no.	5A Cl. 0,2 Art.-no.	5A Cl. 0,2s Art.-no.
400	2.5	1273-10000				
	3.75	1273-10001				
	5	1273-10002				
	7.5					
	10					
500	2.5	1273-10003	1273-10500			
	3.75	1273-10004	1273-10501			
	5	1273-10005				
	10					
600	2.5	1273-10006	1273-10502			
	3.75	1273-10007	1273-10503			
	5	1273-10008	1273-10504			
	10	1273-10009				
750	2.5	1273-10010	1273-10505			
	3.75	1273-10011	1273-10506			
	5	1273-10012	1273-10507			
	7.5	1273-10013	1273-10508			
	10	1273-10014	1273-10509			
800	2.5	1273-10015	1273-10510			
	3.75	1273-10016	1273-10511			
	5	1273-10017	1273-10512			
	7.5	1273-10018	1273-10513			
	10	1273-10019	1273-10514			
1000	2.5	1273-10020	1273-10515			
	5	1273-10021	1273-10516			
	7.5	1273-10022	1273-10517			
	10	1273-10023	1273-10518			
	15	1273-10024	1273-10519			
1250	2.5	1273-10025	1273-10520			
	5	1273-10026	1273-10521			
	10	1273-10027	1273-10522			
	15	1273-10028	1273-10523			
1500	2.5	1273-10029	1273-10524			
	5	1273-10030	1273-10525	1273-10600		
	10	1273-10031	1273-10526	1273-10601		
	15	1273-10032	1273-10527			
1600	2.5	1273-10033	1273-10528			
	5	1273-10034	1273-10529	1273-10602		
	10	1273-10035	1273-10530	1273-10603		
	15	1273-10036	1273-10531			

ASK 127.3

Busbar: 122 x 71 mm
Transformer width: 159 mm
Height: 188 mm
Depth: 30 mm

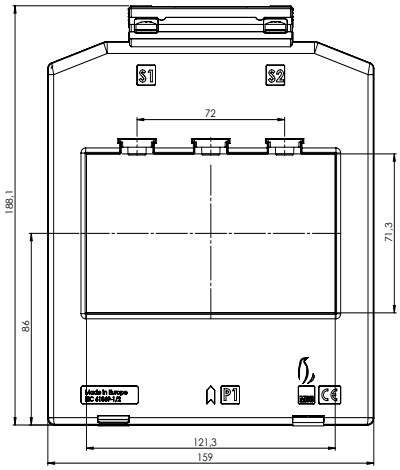

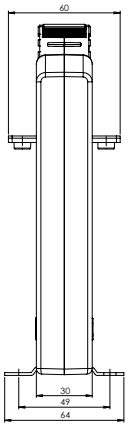

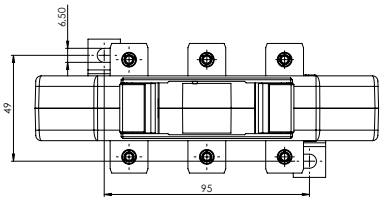

		Secondary current [A] / Class				
Primary current [A]	Burden [VA]	5A Cl. 1 Art.-no.	5A Cl. 0,5 Art.-no.	5A Cl. 0,5s Art.-no.	5A Cl. 0,2 Art.-no.	5A Cl. 0,2s Art.-no.
2000	2.5	1273-10037	1273-10532			
	5	1273-10038	1273-10533	1273-10604	1273-10900	
	10	1273-10039	1273-10534	1273-10605	1273-10901	
	15	1273-10040	1273-10535	1273-10606		
2500	2.5	1273-10041	1273-10536			
	5	1273-10042	1273-10537	1273-10607	1273-10902	1273-10400
	10	1273-10043	1273-10538	1273-10608	1273-10903	
	15	1273-10044	1273-10539	1273-10609		
3000	2.5	1273-10045	1273-10540			
	5	1273-10046	1273-10541	1273-10610	1273-10904	1273-10401
	10	1273-10047	1273-10542	1273-10611	1273-10905	1273-10402
	15	1273-10048	1273-10543	1273-10612	1273-10906	
4000	5	1273-10049	1273-10544	1273-10613	1273-10907	1273-10403
	10	1273-10050	1273-10545	1273-10614	1273-10908	1273-10404
	15	1273-10051	1273-10546	1273-10615	1273-10909	1273-10405

		Secondary current [A] / Class				
Primary current [A]	Burden [VA]	1A Cl. 1 Art.-no.	1A Cl. 0,5 Art.-no.	1A Cl. 0,5s Art.-no.	1A Cl. 0,2 Art.-no.	1A Cl. 0,2s Art.-no.
400	2.5	1273-10200				
	3.75	1273-10201				
	5	1273-10202				
	7.5					
	10					
500	2.5	1273-10203	1273-10700			
	3.75	1273-10204				
	5	1273-10205				
	10	1273-10206				
600	2.5	1273-10207	1273-10701			
	3.75	1273-10208	1273-10702			
	5	1273-10209	1273-10703			
	10	1273-10210				
750	2.5	1273-10211	1273-10704			
	3.75	1273-10212	1273-10705			
	5	1273-10213	1273-10706			
	7.5					
	10					
800	2.5	1273-10214	1273-10707			
	3.75	1273-10215	1273-10708			
	5	1273-10216	1273-10709			
	7.5	1273-10217				
	10	1273-10218				

ASK 127.3

Plug-in current transformer

Busbar: 122 x 71 mm
Transformer width: 159 mm
Height: 188 mm
Depth: 30 mm

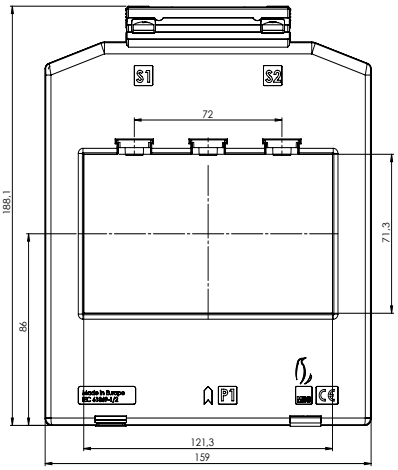

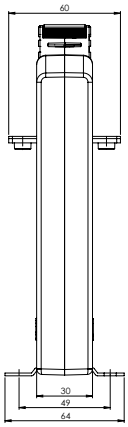

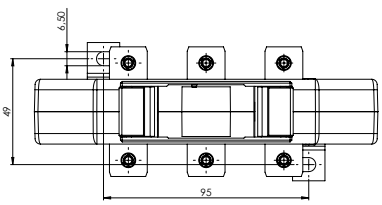

		Secondary current [A] / Class				
Primary current [A]	Burden [VA]	1A Cl. 1 Art.-no.	1A Cl. 0,5 Art.-no.	1A Cl. 0,5s Art.-no.	1A Cl. 0,2 Art.-no.	1A Cl. 0,2s Art.-no.
1000	2.5	1273-10219	1273-10710			
	5	1273-10220	1273-10711			
	7.5	1273-10221	1273-10712			
	10	1273-10222	1273-10713			
	15	1273-10223				
1250	2.5	1273-10224	1273-10714			
	5	1273-10225	1273-10715			
	10	1273-10226	1273-10716			
	15	1273-10227	1273-10717			
1500	2.5	1273-10228	1273-10718			
	5	1273-10229	1273-10719	1273-10800		
	10	1273-10230	1273-10720	1273-10801		
	15	1273-10231	1273-10721			
1600	2.5	1273-10232	1273-10722			
	5	1273-10233	1273-10723	1273-10802		
	10	1273-10234	1273-10724	1273-10803		
	15	1273-10235	1273-10725			
2000	2.5	1273-10236	1273-10726			
	5	1273-10237	1273-10727	1273-10804	1273-10300	
	10	1273-10238	1273-10728	1273-10805	1273-10301	
	15	1273-10239	1273-10729	1273-10806		
2500	2.5	1273-10240	1273-10730			
	5	1273-10241	1273-10731	1273-10807	1273-10302	1273-10100
	10	1273-10242	1273-10732	1273-10808	1273-10303	
	15	1273-10243	1273-10733	1273-10809		
3000	2.5	1273-10244	1273-10734			
	5	1273-10245	1273-10735	1273-10810	1273-10304	1273-10101
	10	1273-10246	1273-10736	1273-10811	1273-10305	1273-10102
	15	1273-10247	1273-10737	1273-10812	1273-10306	
4000	5	1273-10248	1273-10738	1273-10813	1273-10307	1273-10103
	10	1273-10249	1273-10739	1273-10814	1273-10308	1273-10104
	15	1273-10250	1273-10740	1273-10815	1273-10309	1273-10105

ASK 127.4

Plug-in current transformer

Busbar 1	120 x 70 mm
Round conductor	70 mm
Transformer width	159 mm
Height	195,3 mm
Depth	58 mm

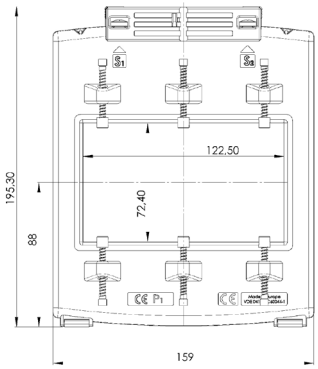

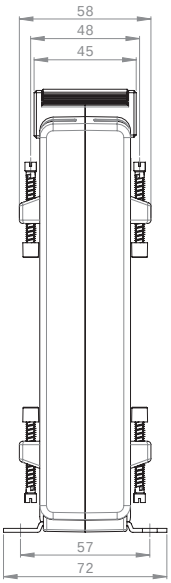

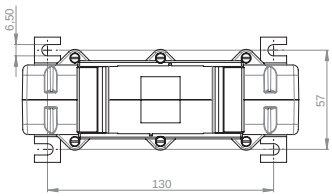

	Secondary current [A] / Class			
Primary current [A] / Burden [VA]	5 A Cl. 1 Art.-no.	5 A Cl. 0,5 Art.-no.	1 A Cl. 1 Art.-no.	1 A Cl. 0,5 Art.-no.
1000 / 5	87540	87510	87640	87610
1000 / 10	87541	87511	87641	87611
1200 / 5	87542	87512	87642	87612
1200 / 10	87543	87513	87643	87613
1200 / 15	87544	87514	87644	87614
1250 / 10	87545	87515	87645	87615
1250 / 15	87546	87516	87646	87616
1250 / 30	87547	87517	87647	87617
1500 / 10	87548	87518	87648	87618
1500 / 15	87549	87519	87649	87619
1500 / 30	87550	87520	87650	87620
1600 / 10	87551	87521	87651	87621
1600 / 15	87552	87522	87652	87622
1600 / 30	87553	87523	87653	87623
1800 / 10	87554	87524	87654	87624
1800 / 15	87555	87525	87655	87625
1800 / 30	87556	87526	87656	87626
2000 / 10	87557	87527	87657	87627
2000 / 15	87558	87528	87658	87628
2000 / 30	87559	87529	87659	87629
2500 / 10	87561	87531	87661	87631
2500 / 15	87562	87532	87662	87632
2500 / 30	87563	87533	87663	87633

		Art.-no.
	Snap-on mounting	**–**
	Sealed shutter, type C	**59042**

ASK 127.6

Plug-in current transformer

Busbar 1	120 x 70 mm
Round conductor	70 mm
Transformer width	205 mm
Height	203 mm
Depth	78 mm

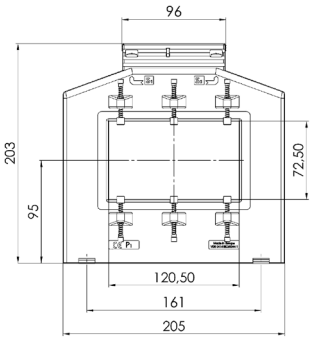

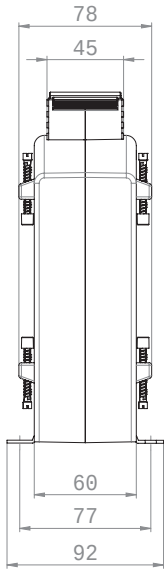

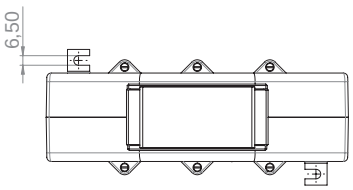

	Secondary current [A] / Class			
Primary current [A]	Burden [VA]	5 A Cl. 1 Art.-no.	5 A Cl. 0,5 Art.-no.	1 A Cl. 1 Art.-no.	1 A Cl. 0,5 Art.-no.
1000	5	87055	87011	87255	87211
	10	87056		87256	
1200	5	87057	87013	87257	87213
	10	87058	87014	87258	87214
	15	87059		87259	
1250	5	87060	87016	87260	87216
	10	87061	87017	87261	87217
	15	87062	87018	87262	87218
	30	87063	87019	87263	87219
1500	5	87064	87020	87264	87220
	10	87065	87021	87265	87221
	15	87066	87022	87266	87222
	30	87067	87023	87267	87223
1800	5	87068	87024	87268	87224
	10	87069	87025	87269	87225
	15	87070	87026	87270	87226
	30	87071	87027	87271	87227
2000	10	87072	87028	87272	87228
	15	87073	87029	87273	87229
	30	87074	87030	87274	87230
2500	10	87076	87032	87276	87232
	15	87077	87033	87277	87233
	30	87078	87034	87278	87234
	45	87079		87279	
3000	10	87081	87036	87281	87236
	15	87082	87037	87282	87237
	30	87083	87038	87283	87238
	45	87084		87284	
4000	10	87085	87040	87285	87240
	15	87086	87041	87286	87241
	30	87087	87042	87287	87242
	45	87088		87288	
5000	10	87089	87044	87289	87244
	15	87090	87045	87290	87245
	30	87091	87046	87291	87246
	45	87092		87292	
6000	10	87093	87048	87293	87248
	15	87094	87049	87294	87249
	30	87095	87050	87295	87250
	45	87096		87296	

		Art.-no.
	Snap-on mounting	**–**
	Sealed shutter, type C	**59042**

ASK 128.4

Plug-in current transformer

Busbar 1	128 x 38 mm
Round conductor	38 mm
Transformer width	100 mm
Height	175 mm
Depth	58 mm

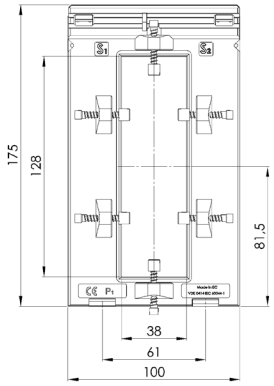

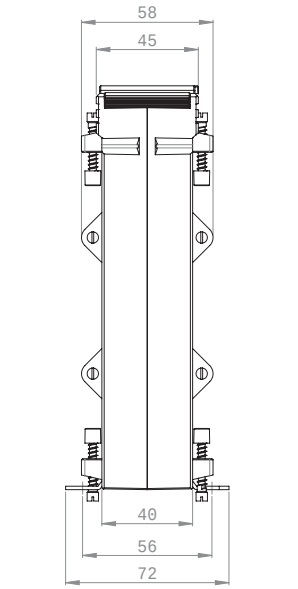

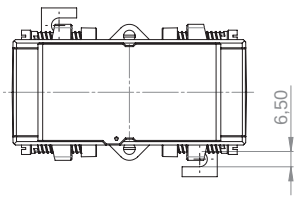

	Secondary current [A] / Class			
Primary current [A]	Burden [VA]	5 A Cl. 1 Art.-no.	5 A Cl. 0,5 Art.-no.	1 A Cl. 1 Art.-no.	1 A Cl. 0,5 Art.-no.
400	2,5	94041	94011	94241	94211
	5	94042		94242	
500	2,5	94043	94013	94243	94213
	5	94044		94244	
600	2,5	94045	94015	94245	94215
	5	94046		94246	
750	2,5	94047	94017	94247	94217
	5	94048		94248	
800	5	94049	94019	94249	94219
	10	94050		94250	
1000	10	94051	94021	94251	94221
	15	94052		94252	
1200	10	94053	94023	94253	94223
	15	94054		94254	
1250	10	94055	94025	94255	94225
	15	94056		94256	
1500	15	94057	94027	94257	94227
	30	94058		94258	
2000	15	94059	94029	94259	94229
	30	94060		94260	
2500	15	94061	94031	94261	94231
	30	94062		94262	

		Art.-no.
	Snap-on mounting	**–**
	Sealed shutter, type C	**59042**

ASK 129.10

Plug-in current transformer

Busbar 1	120 x 90 mm
Round conductor	90 mm
Transformer width	250 mm
Height	247 mm
Depth	118 mm

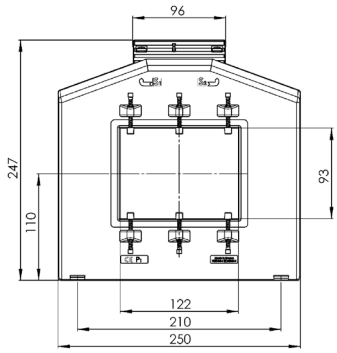

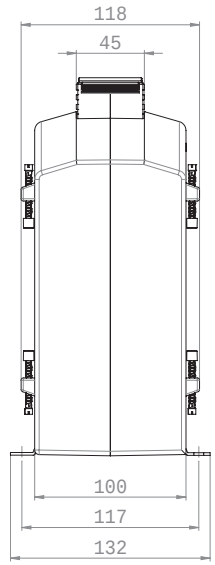

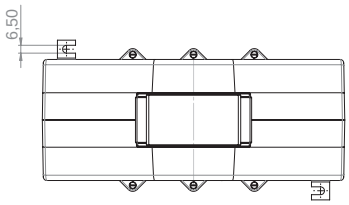

	Secondary current [A] / Class			
Primary current [A]	Burden [VA]	5 A Cl. 1 Art.-no.	5 A Cl. 0,5 Art.-no.	1 A Cl. 1 Art.-no.	1 A Cl. 0,5 Art.-no.
1000	5	88070	88011	88270	88211
	10	88071	88012	88271	88212
	15	88072	88013	88272	88213
1200	5	88073	88014	88273	88214
	10	88074	88015	88274	88215
	15	88075		88275	
1250	5	88076	88017	88276	88217
	10	88077	88018	88277	88218
	15	88078		88278	
1500	10	88079	88020	88279	88220
	15	88080	88021	88280	88221
	30	88081	88022	88281	88222
1600	10	88082	88023	88282	88223
	15	88083	88024	88283	88224
	30	88084	88025	88284	88225
1800	10	88085	88026	88285	88226
	15	88086	88027	88286	88227
	30	88087	88028	88287	88228
2000	10	88088	88029	88288	88229
	15	88089	88030	88289	88230
	30	88090	88031	88290	88231
2500	15	88091	88032	88291	88232
	30	88092	88033	88292	88233
	45	88093		88293	
3000	15	88094	88035	88294	88235
	30	88095	88036	88295	88236
	45	88096		88296	
4000	15	88097	88038	88297	88238
	30	88098	88039	88298	88239
	45	88099	88040	88299	88240
5000	15	88100	88041	88300	88241
	30	88101	88042	88301	88242
	45	88102	88043	88302	88243
6000	15	88103	88044	88303	88244
	30	88104	88045	88304	88245
	45	88105	88046	88305	88246
7500	15	88106	88047	88306	88247
	30	88107	88048	88307	88248
	45	88108	88049	88308	88249

		Art.-no.
	Snap-on mounting	**–**
	Sealed shutter, type C	**59042**

ASK 130.3

Plug-in current transformer

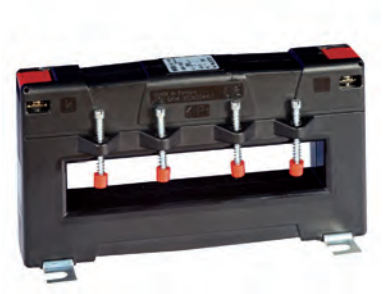

Busbar 1	130 x 25 mm
Round conductor	25 mm
Transformer width	180 mm
Height	100 mm
Depth	50 mm

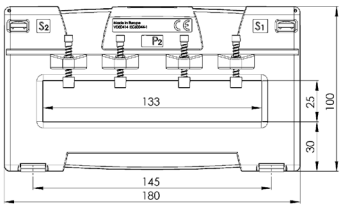

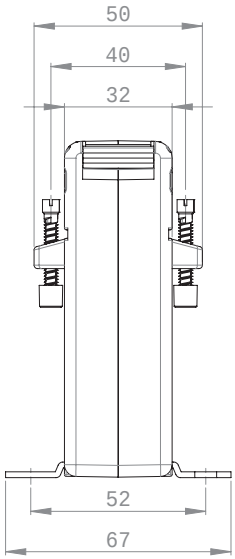

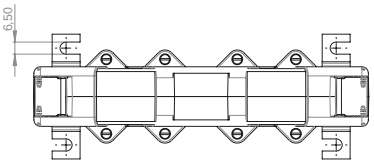

	Secondary current [A] / Class				
Primary current [A]	Burden [VA]	5 A Cl. 1 Art.-no.	5 A Cl. 0,5 Art.-no.	5 A Cl. 0,2s Art.-no.	1 A Cl. 1 Art.-no.	1 A Cl. 0,5 Art.-no.
300	2,5	I50-1900D	I50-1901D		I50-1910D	I50-1911D
	5	I50-1900F	I50-1901F		I50-1910F	I50-1911F
400	2,5	I50-2000D	I50-2001D		I50-2010D	I50-2011D
	5	I50-2000F	I50-2001F		I50-2010F	I50-2011F
	10	I50-2000H			I50-2010H	
500	2,5	I50-2100D	I50-2101D		I50-2110D	I50-2111D
	5	I50-2100F	I50-2101F		I50-2110F	I50-2111F
	10	I50-2100H	I50-2101H		I50-2110H	I50-2111H
600	2,5	I50-2200D	I50-2201D		I50-2210D	I50-2211D
	5	I50-2200F	I50-2201F		I50-2210F	I50-2211F
	10	I50-2200H	I50-2201H		I50-2210H	I50-2211H
	15	I50-2200J			I50-2210J	
750	2,5	I50-2300D	I50-2301D	V50-2304D	I50-2310D	I50-2311D
	5	I50-2300F	I50-2301F		I50-2310F	I50-2311F
	10	I50-2300H	I50-2301H		I50-2310H	I50-2311H
	15	I50-2300J	I50-2301J		I50-2310J	I50-2311J
1000	5	I50-2500F	I50-2501F	V50-2504F	I50-2510F	I50-2511F
	10	I50-2500H	I50-2501H		I50-2510H	I50-2511H
	15	I50-2500J	I50-2501J		I50-2510J	I50-2511J
	30	I50-2500L			I50-2510L	
1200	5	I50-2600F	I50-2601F	V50-2604F	I50-2610F	I50-2611F
	10	I50-2600H	I50-2601H	V50-2604H	I50-2610H	I50-2611H
	15	I50-2600J	I50-2601J		I50-2610J	I50-2611J
	30	I50-2600L			I50-2610L	
1250	5	I50-2700F	I50-2701F	V50-2704F	I50-2710F	I50-2711F
	10	I50-2700H	I50-2701H	V50-2704H	I50-2710H	I50-2711H
	15	I50-2700J	I50-2701J	V50-2704J	I50-2710J	I50-2711J
	30	I50-2700L			I50-2710L	
1500	5	I50-2800F	I50-2801F	V50-2804F	I50-2810F	I50-2811F
	10	I50-2800H	I50-2801H	V50-2804H	I50-2810H	I50-2811H
	15	I50-2800J	I50-2801J	V50-2804J	I50-2810J	I50-2811J
	30	I50-2800L	I50-2801L		I50-2810L	I50-2811L
1600	5	I50-2900F	I50-2901F	V50-2904F	I50-2910F	I50-2911F
	10	I50-2900H	I50-2901H	V50-2904H	I50-2910H	I50-2911H
	15	I50-2900J	I50-2901J	V50-2904J	I50-2910J	I50-2911J
	30	I50-2900L	I50-2901L		I50-2910L	I50-2911L

		Art.-no.
	Snap-on mounting	–
	Sealed shutter	–

ASK 130.5

Plug-in current transformer

Busbar 1	130 x 30 mm
Round conductor	30 mm
Transformer width	180 mm
Height	120 mm
Depth	68 mm

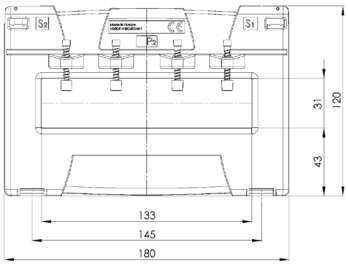

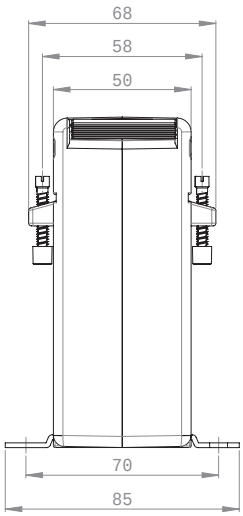

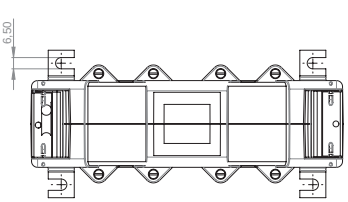

	Secondary current [A] / Class			
Primary current [A]	Burden [VA]	5 A Cl. 1 Art.-no.	5 A Cl. 0,5 Art.-no.	1 A Cl. 1 Art.-no.	1 A Cl. 0,5 Art.-no.
300	2,5	I51-1900D	I51-1901D	I51-1910D	I51-1911D
	5	I51-1900F	I51-1901F	I51-1910F	I51-1911F
	10	I51-1900H	I51-1901H	I51-1910H	I51-1911H
400	2,5	I51-2000D	I51-2001D	I51-2010D	I51-2011D
	5	I51-2000F	I51-2001F	I51-2010F	I51-2011F
	10	I51-2000H	I51-2001H	I51-2010H	I51-2011H
500	2,5	I51-2100D	I51-2101D	I51-2110D	I51-2111D
	5	I51-2100F	I51-2101F	I51-2110F	I51-2111F
	10	I51-2100H	I51-2101H	I51-2110H	I51-2111H
	15	I51-2100J	I51-2101J	I51-2110J	I51-2111J
600	5	I51-2200F	I51-2201F	I51-2210F	I51-2211F
	10	I51-2200H	I51-2201H	I51-2210H	I51-2211H
	15	I51-2200J	I51-2201J	I51-2210J	I51-2211J
750	5	I51-2300F	I51-2301F	I51-2310F	I51-2311F
	10	I51-2300H	I51-2301H	I51-2310H	I51-2311H
	15	I51-2300J	I51-2301J	I51-2310J	I51-2311J
1000	5	I51-2500F	I51-2501F	I51-2510F	I51-2511F
	10	I51-2500H	I51-2501H	I51-2510H	I51-2511H
	15	I51-2500J	I51-2501J	I51-2510J	I51-2511J
	30	I51-2500L	I51-2501L	I51-2510L	I51-2511L
1200	5	I51-2600F	I51-2601F	I51-2610F	I51-2611F
	10	I51-2600H	I51-2601H	I51-2610H	I51-2611H
	15	I51-2600J	I51-2601J	I51-2610J	I51-2611J
	30	I51-2600L	I51-2601L	I51-2610L	I51-2611L
1250	5	I51-2700F	I51-2701F	I51-2710F	I51-2711F
	10	I51-2700H	I51-2701H	I51-2710H	I51-2711H
	15	I51-2700J	I51-2701J	I51-2710J	I51-2711J
	30	I51-2700L	I51-2701L	I51-2710L	I51-2711L
1500	5	I51-2800F	I51-2801F	I51-2810F	I51-2811F
	10	I51-2800H	I51-2801H	I51-2810H	I51-2811H
	15	I51-2800J	I51-2801J	I51-2810J	I51-2811J
	30	I51-2800L	I51-2801L	I51-2810L	I51-2811L
1600	5	I51-2900F	I51-2901F	I51-2910F	I51-2911F
	10	I51-2900H	I51-2901H	I51-2910H	I51-2911H
	15	I51-2900J	I51-2901J	I51-2910J	I51-2911J
	30	I51-2900L	I51-2901L	I51-2910L	I51-2911L
2000	10	I51-3000H	I51-3001H	I51-3010H	I51-3011H
	15	I51-3000J	I51-3001J	I51-3010J	I51-3011J
	30	I51-3000L	I51-3001L	I51-3010L	I51-3011L
2400	10	I51-3100H	I51-3101H	I51-3110H	I51-3111H
	15	I51-3100J	I51-3101J	I51-3110J	I51-3111J
	30	I51-3100L	I51-3101L	I51-3110L	I51-3111L
2500	10	I51-3200H	I51-3201H	I51-3210H	I51-3211H
	15	I51-3200J	I51-3201J	I51-3210J	I51-3211J
	30	I51-3200L	I51-3201L	I51-3210L	I51-3211L
3000	10	I51-3300H	I51-3301H	I51-3310H	I51-3311H
	15	I51-3300J	I51-3301J	I51-3310J	I51-3311J
	30	I51-3300L	I51-3301L	I51-3310L	I51-3311L
3200	10	I51-3400H	I51-3401H	I51-3410H	I51-3411H
	15	I51-3400J	I51-3401J	I51-3410J	I51-3411J
	30	I51-3400L	I51-3401L	I51-3410L	I51-3411L

		Art.-no.
	Snap-on mounting	–
	Sealed shutter	–

ASK 165.5

Plug-in current transformer

Selectable positions of the secondary terminals allow flexible positions of installation.

Busbar 1	190 x 60 mm
Busbar 2	3 x 160 x 10 mm
Transformer width	266 mm
Height	192 mm
Depth	100 mm

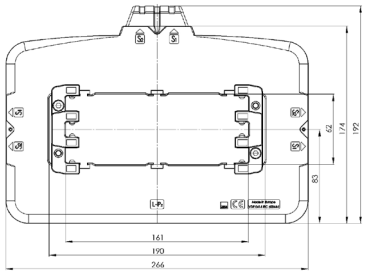

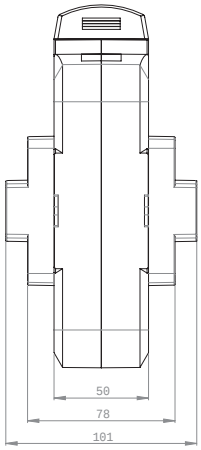

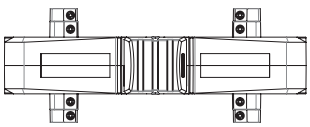

	Secondary current [A] / Class		
Primary current [A]	Burden [VA]	5 A Cl. 1 Art.-no.	5 A Cl. 0,5 Art.-no.	5 A Cl. 0,2 Art.-no.
1000	5	1650006021-x	1650005001-x	1650003001-x
	10	1650006022-x	1650005002-x	
	15	1650006001-x		
1200	5	1650006023-x	1650005003-x	1650003003-x
	10	1650006024-x	1650005004-x	1650003004-x
	15	1650006002-x	1650005022-x	
1250	5	1650006025-x	1650005023-x	1650003005-x
	10	1650006026-x	1650005030-x	1650003006-x
	15	1650006003-x	1650005024-x	
1500	10	1650006027-x	1650005005-x	1650003007-x
	15	1650006028-x	1650005006-x	
	30	1650006004-x	1650005025-x	
1600	10	1650006029-x	1650005007-x	1650003008-x
	15	1650006030-x	1650005008-x	
	30	1650006005-x	1650005026-x	
2000	10	1650006031-x	1650005009-x	1650003009-x
	15	1650006032-x	1650005010-x	1650003020-x
	30	1650006006-x	1650005011-x	
	45	1650006007-x		
2500	15	1650006033-x	1650005027-x	1650003010-x
	30	1650006034-x	1650005012-x	
	60	1650006008-x		
3000	15	1650006035-x	1650005028-x	1650003012-x
	30	1650006020-x	1650005013-x	1650003013-x
	60	1650006009-x		
4000	30	1650006036-x	1650005015-x	1650003015-x
	40	1650006037-x		
	60	1650006011-x		

		Art.-no.
	Clamping claw	**59090**

ASK 165.5

Plug-in current transformer

The secondary terminals of the current transformer type ASK 165.5 can be realized in 3 different positions. Please be so kind and choose with your order.
The clamping claw can be also delivered if needed. Please also state in your order.

Connection options

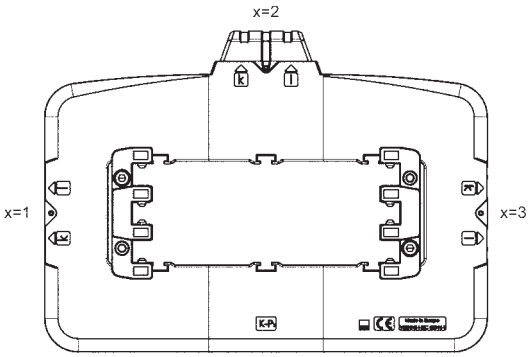

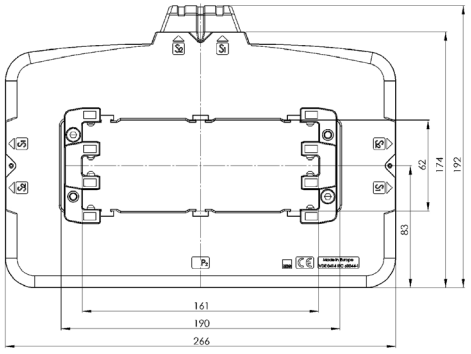

Order example

ASK 165.5 1500/5A 10VA Cl.1
Connection option „top“
Art.-no. 1650006027-2

ASK 165.5

Plug-in current transformer

Selectable positions of the secondary terminals allow flexible positions of installation.

Busbar 1	190 x 60 mm
Busbar 2	3 x 160 x 10 mm
Transformer width	266 mm
Height	192 mm
Depth	100 mm

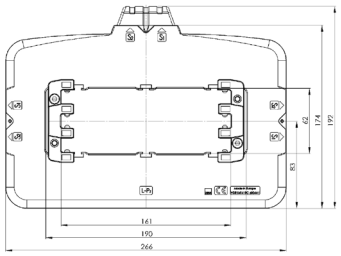

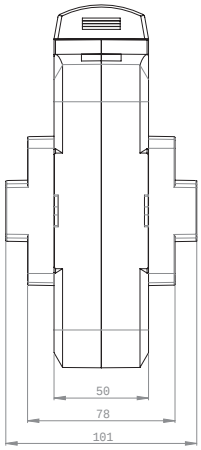

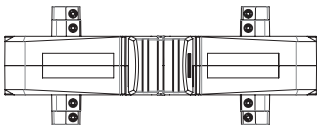

	Secondary current [A] / Class		
Primary current [A]	Burden [VA]	1 A Cl. 1 Art.-no.	1 A Cl. 0,5 Art.-no.	1 A Cl. 0,2 Art.-no.
1000	5	1650206021-x	1650205001-x	1650203001-x
	10	1650206022-x	1650205002-x	
	15	1650206001-x		
1200	5	1650206023-x	1650205004-x	1650203003-x
	10	1650206024-x	1650205005-x	1650203004-x
	15	1650206002-x	1650205024-x	
1250	5	1650206025-x	1650205025-x	1650203005-x
	10	1650206026-x	1650205006-x	1650203006-x
	15	1650206003-x	1650205026-x	
1500	10	1650206027-x	1650205007-x	1650203007-x
	15	1650206028-x	1650205008-x	
	30	1650206004-x	1650205027-x	
1600	10	1650206029-x	1650205009-x	1650203008-x
	15	1650206030-x	1650205010-x	
	30	1650206005-x	1650205028-x	
2000	10	1650206031-x	1650205011-x	1650203009-x
	15	1650206032-x	1650205012-x	1650203020-x
	30	1650206006-x	1650205013-x	
	45	1650206007-x		
2500	15	1650206033-x	1650205029-x	1650203010-x
	30	1650206034-x	1650205014-x	
	60	1650206008-x		
3000	15	1650206035-x	1650205030-x	1650203011-x
	30	1650206036-x	1650205015-x	1650203012-x
	60	1650206009-x		
4000	30	1650206037-x	1650205017-x	1650203014-x
	40	1650206038-x		
	60	1650206011-x		

		Art.-no.
	Clamping claw	**59090**

ASK 165.5

Plug-in current transformer

The secondary terminals of the current transformer type ASK 165.5 can be realized in 3 different positions. Please be so kind and choose with your order.
The clamping claw can be also delivered if needed. Please also state in your order.

Connection options

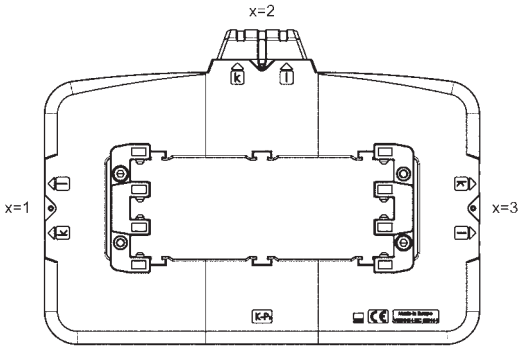

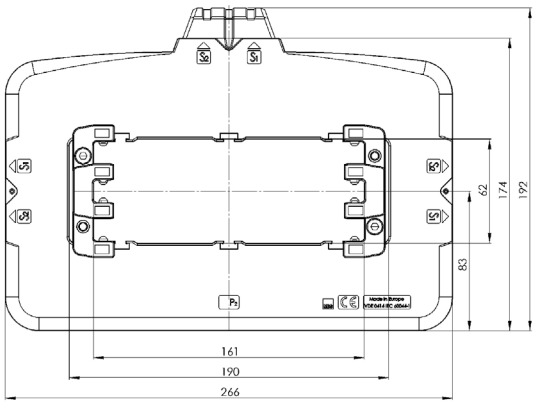

Order example

ASK 165.5 1500/5A 10VA Cl.1
Connection option „top“
Art.-no. 1650006027-2

ASK 205.5

Plug-in current transformer

Selectable positions of the secondary terminals allow flexible positions of installation.

Busbar 1	230 x 60 mm
Busbar 2	3 x 200 x 10 mm
Transformer width	306 mm
Height	192 mm
Depth	100 mm

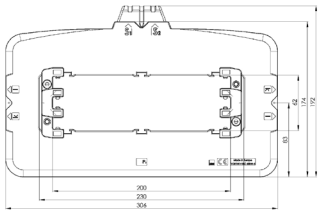

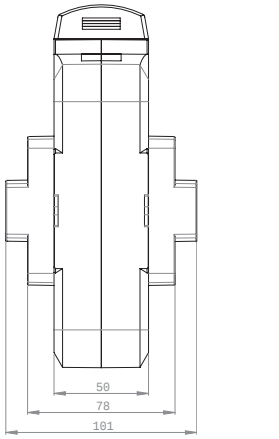

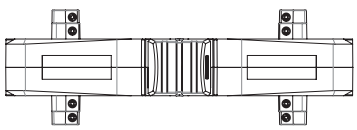

Primary current [A]	Burden [VA]	Secondary current [A] / Class 5 A Cl. 1 Art.-no.	5 A Cl. 0,5 Art.-no.	5 A Cl. 0,2 Art.-no.
1200	5	2050006023-x	2050005023-x	2050003001-x
	10	2050006024-x	2050005001-x	
	15	2050006001-x	2050005024-x	
1250	5	2050006025-x	2050005025-x	2050003003-x
	10	2050006026-x	2050005002-x	2050003004-x
	15	2050006002-x	2050005026-x	
1500	5	2050006027-x	2050005027-x	2050003005-x
	10	2050006028-x	2050005003-x	2050003006-x
	15	2050006003-x	2050005004-x	2050003007-x
	30	2050006004-x		
1600	5	2050006029-x	2050005028-x	2050003008-x
	10	2050006030-x	2050005029-x	2050003009-x
	15	2050006005-x	2050005005-x	2050003010-x
	30	2050006006-x		
2000	10	2050006031-x	2050005030-x	2050003011-x
	15	2050006032-x	2050005006-x	2050003012-x
	30	2050006007-x	2050005007-x	
2500	10	2050006033-x	2050005031-x	2050003013-x
	15	2050006034-x	2050005008-x	2050003014-x
	30	2050006035-x	2050005009-x	
3000	10	2050006036-x	2050005032-x	2050003015-x
	15	2050006037-x	2050005010-x	2050003016-x
	30	2050006038-x	2050005011-x	2050003017-x
	45	2050006009-x		
4000	15	2050006039-x	2050005033-x	2050003019-x
	30	2050006010-x	2050005012-x	2050003020-x
	60	2050006011-x		
5000	15	2050006040-x	2050005034-x	2050003021-x
	30	2050006013-x	2050005014-x	2050003022-x
	60	2050006014-x		

		Art.-no.
	Clamping claw	**59090**

ASK 205.5

Plug-in current transformer

The secondary terminals of the current transformer type ASK 205.5 can be realized in 3 different positions. Please be so kind and choose with your order.
The clamping claw can be also delivered if needed. Please also state in your order.

Connection options

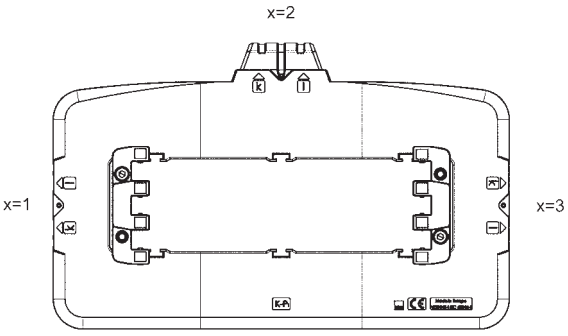

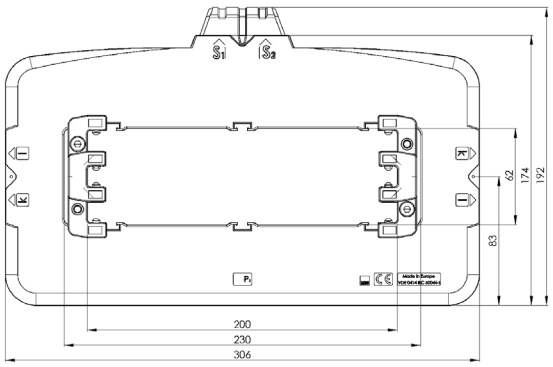

Order example

ASK 205.5 1500/5A 10VA Cl.1
Connection option „top“
Art.-no. 2050006028-2

ASK 205.5

Plug-in current transformer

Selectable positions of the secondary terminals allow flexible positions of installation.

Busbar 1	230 x 60 mm
Busbar 2	3 x 200 x 10 mm
Transformer width	306 mm
Height	192 mm
Depth	100 mm

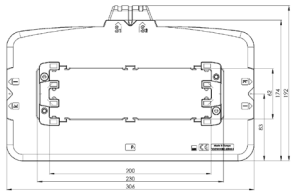

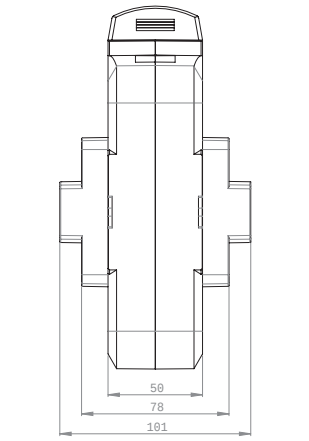

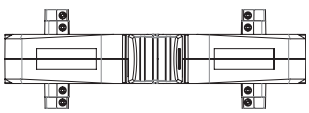

	Secondary current [A] / Class		
Primary current [A]	Burden [VA]	1 A Cl. 1 Art.-no.	1 A Cl. 0,5 Art.-no.	1 A Cl. 0,2 Art.-no.
1200	5	2050206023-x	2050205023-x	2050203001-x
	10	2050206024-x	2050205001-x	
	15	2050206001-x	2050205024-x	
1250	5	2050206025-x	2050205025-x	2050203003-x
	10	2050206026-x	2050205002-x	2050203004-x
	15	2050206002-x	2050205026-x	
1500	5	2050206027-x	2050205027-x	2050203005-x
	10	2050206028-x	2050205503-x	2050203006-x
	15	2050206003-x	2050205004-x	2050203007-x
	30	2050206004-x		
1600	10	2050206029-x	2050205028-x	2050203009-x
	15	2050206005-x	2050205005-x	2050203010-x
	30	2050206006-x		
2000	10	2050206030-x	2050205029-x	2050203011-x
	15	2050206031-x	2050205006-x	2050203012-x
	30	2050206007-x	2050205007-x	
2500	10	2050206032-x	2050205030-x	2050203013-x
	15	2050206033-x	2050205508-x	2050203014-x
	30	2050206034-x	2050205009-x	
3000	10	2050206035-x	2050205031-x	2050203015-x
	15	2050206036-x	2050205010-x	2050203016-x
	30	2050206037-x	2050205011-x	2050203017-x
	45	2050206009-x		
4000	15	2050206038-x	2050205032-x	2050203019-x
	30	2050206010-x	2050205012-x	2050203020-x
	60	2050206011-x		
5000	15	2050206039-x	2050205033-x	2050203021-x
	30	2050206013-x	2050205014-x	2050203022-x
	60	2050206014-x		

		Art.-no.
	Clamping claw	**59090**

ASK 205.5

Plug-in current transformer

The secondary terminals of the current transformer type ASK 205.5 can be realized in 3 different positions. Please be so kind and choose with your order.
The clamping claw can be also delivered if needed. Please also state in your order.

Connection options

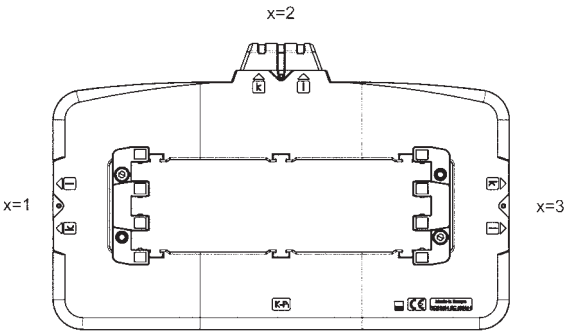

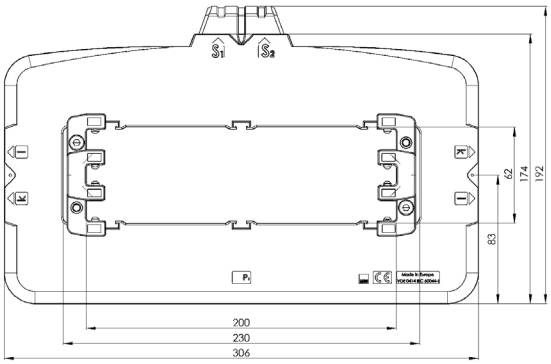

Order example

ASK 205.5 1500/5A 10VA Cl.1
Connection option „top“
Art.-no. 2050006028-2